Index + file Misc

REALISTIC®

# Service Manual

31-2095

## STA-2250
## DIGITAL SYNTHESIZED
## AM/FM STEREO RECEIVER

**Catalog Number: 31-2095**

CUSTOM MANUFACTURED FOR RADIO SHACK TC A DIVISION OF TANDY CORPORATION

# CONTENTS


PAGE

(1) ELECTRICAL PERFORMANCE SPECIFICATIONS ..... 3 – 5
(2) DISASSEMBLY INSTRUCTIONS ..... 6 – 7
(3) BLOCK DIAGRAM ..... 8
(4) PRINCIPLES OF OPERATION ..... 9
1 PLL CIRCUITRY ..... 9 – 10
2-1 SCHEMATIC DIAGRAM OF MICROPROCESSOR SECTION .... 11 – 13
2-2 MICROPROCESSOR CIRCUITRY ..... 14
3 FREQUENCY DISPLAY CONTROL CIRCUIT ..... 15
4 AUTO STOP CIRCUIT FOR AUTO SEARCH ..... 16 – 17
5 PROTECTOR CIRCUIT DESCRIPTION ..... 18 – 20
6 SIGNAL LEVEL METER DESCRIPTION ..... 21 – 22
(5) LEVEL DIAGRAM ..... 23
(6) VCO OUTPUT FREQUENCY, IC805 INPUT FREQUENCY AND CODE TABLE ..... 24 – 25
(7) VCO VS FM BAND FREQUENCY CURVE ..... 24
(8) VCO VS AM BAND FREQUENCY CURVE ..... 25
(9) AM/FM PLL CIRCUIT OPERATION CHECK ..... 26
(10) ALIGNMENT INSTRUCTIONS ..... 27 – 35
(11) TROUBLESHOOTING ..... 35 – 39
(12) IC & TRANSISTOR LEAD IDENTIFICATION ..... 40
(13) SEMICONDUCTOR VOLTAGE READING ..... 41 – 44
(14) IC INTERNAL DIAGRAM ..... 44 – 49
(15) AM/FM TUNER & IF P.C.B. (TOP & BOTTOM VIEWS) ..... 50 – 51
(16) CONTROLLER P.C.B. (TOP & BOTTOM VIEWS) ..... 52
(17) AUTO/MANUAL SEARCH P.C.B. (TOP & BOTTOM VIEWS) ..... 52
(18) PRE AMP P.C.B. (TOP & BOTTOM VIEWS) ..... 53
(19) SPEAKER SWITCH P.C.B. (TOP & BOTTOM VIEWS) ..... 53
(20) MAIN AMP P.C.B. (TOP & BOTTOM VIEWS) ..... 54
(21) MODE SWITCH P.C.B. (TOP & BOTTOM VIEWS) ..... 55
(22) POWER TRANSISTOR P.C.B. (LEFT) (TOP & BOTTOM VIEWS) ..... 55
(23) POWER TRANSISTOR P.C.B. (RIGHT) (TOP & BOTTOM VIEWS) ..... 55
(24) TONE AMP P.C.B. (TOP & BOTTOM VIEWS) ..... 56 – 57
(25) DISPLAY P.C.B. (TOP & BOTTOM VIEWS) ..... 56 – 57
(26) POWER SUPPLY P.C.B. (TOP & BOTTOM VIEWS) ..... 58
(27) ROTARY, TAPE & PROTECTOR P.C.B. (TOP & BOTTOM VIEWS) ..... 59
(28) KEYBOARD SWITCH P.C.B. (TOP & BOTTOM VIEWS) ..... 59
(29) ELECTRICAL PARTS LIST ..... 60 – 68
(30) EXPLODED VIEW PARTS LIST ..... 69 – 70
(31) MISCELLANEOUS PARTS LIST ..... 73
(32) EXPLODED VIEW ..... 71 – 72
(33) SCHEMATIC DIAGRAM (TUNER & DISPLAY SECTION) ..... SEPARATE SHEET
(34) SCHEMATIC DIAGRAM (AUDIO SECTION) ..... SEPARATE SHEET

# (1) ELECTRICAL PERFORMANCE SPECIFICATIONS

## AM BAND

1. Output readings are taken across a non-reactive 47K load termination.
2. Output is measured at TAPE OUT 1 terminals.
3. The Generator output shall terminate in an IRE loop antenna.
4. Standard modulation : 400 Hz, 30% modulation.

| | UNIT | NOMINAL | LIMIT |
|---|---|---|---|
| Frequency Coverage (UL, C.S.A. models) | (kHz) | 530-1610 | 530-1610 |
| Frequency Coverage (Australian models) | (kHz) | 531-1602 | 531-1602 |
| IF | (kHz) | 450 | --- |
| Antenna Sensitivity for S/N 20dB | | | |
| at 600 kHz | ($\mu$V/m) | 250 | 500 |
| at 1000 kHz | ($\mu$V/m) | 250 | 500 |
| at 1400 kHz | ($\mu$V/m) | 250 | 500 |
| Terminal Sensitivity | ($\mu$V) | 20 | ---- |
| S/N Ratio at 5 mV/m Input, 1000 kHz | (dB) | 45 | 38 |
| Selectivity at S/N 20 dB Sens. 1000 kHz $\pm$ 10 kHz | (dB) | 32 | 22 |
| AGC Distortion at 1000 kHz, 100 mV/m Input, 80% Mod. | (%) | 3 | 8 |
| AGC Figure of Merit at 1000 kHz | (dB) | 47 | 40 |
| IF Rejection at 600 kHz | (dB) | 32 | 27 |
| Image Rejection Ratio at 1400 kHz | (dB) | 45 | 35 |
| Bandwidth at 6 dB down, 1000 kHz | (kHz) | 6.0 | 4.5-9 |
| Distortion at 30% Mod. 5 mV/m Input | (%) | 1 | 3 |
| Tape Out Level at 30% Mod. 5 mV/m Input | (mV) | 200 | 200 $\pm$ 2 dB |
| Fidelity 5 mV/m Input (1 kHz = 0 dB) $-$6 dB Point | (Hz) | 40-2.7 k | 50-2.5 k |
| Whistle Modulation of 2nd and 3rd Harmonic | | | |
| at 1 mV/m, 5 mV/m and 100 mV/m Input | (%) | 5 | 15 |
| Spurious Response at 1000 kHz refered to 20 dB | | | |
| S/N Input | (dB) | 60 | 40 |
| Auto Search Stop Level | (mV/m) | 1 | 0.5-2 |

Overload: With a radiated signal of 1 V/m Input, the signal shall be tunable without under distortion or breakup.

The set shall operate in satisfactory manner through a temperature range from 0 degrees C through plus 45 degrees C.

## FM BAND

1. Output readings are taken across a non-reactive 47K load termination.
2. Output is measured at TAPE OUT 1 terminals.
3. The signal voltage in this specification is the voltage appearing across the tuner input terminals (IHF).
4. Standard modulation : 1000 Hz, 75 kHz deviation.

| | UNIT | NOMINAL | LIMIT |
|---|---|---|---|
| Frequency Coverage | (MHz) | 88.1-107.9 | 88.1-107.9 |
| IF | (MHz) | 10.7 | ---- |
| IHF Sensitivity at 90.1, 98.1 and 106.1 MHz | ($\mu$V) | 2 | 3.2 |
| | (dBf) | (11.25) | (15.33) |
| 50 dB Quieting Sensitivity at 90.1, 98.1 and 106.1 MHz | ($\mu$V) | 3.5 | 5.0 |
| | (dBf) | (16.11) | (19.21) |
| S/N Ratio at 1 mV Input, 98.1 MHz | (dB) | 67 | 62 |
| Limiting Sensitivity at $-$3 dB, 98.1 MHz | ($\mu$V) | 1.5 | 2.5 |
| IF Rejection Ratio at 90.1 MHz | (dB) | 95 | 80 |
| Image Rejection Ratio at 106.1 MHz | (dB) | 75 | 65 |
| Spurious Response | (dB) | 80 | 70 |
| Capture Ratio | (dB) | 1.5 | 2.5 |
| ACA at $\pm$400 kHz, 50 $\mu$V Input | (dB) | 65 | 55 |

| | UNIT | NOMINAL | LIMIT |
|---|---|---|---|
| FM Mono Distortion, 75 kHz dev. | (%) | 0.2 | 0.5 |
| AM Suppression (AM 30% Mod., FM 75 kHz Dev.) | (dB) | 50 | 46 |
| Maximum Signal Handling Capacity | (mV) | 200 | 100 |
| Tape Out Level at 1 mV, 75 kHz Dev. | (mV) | 640 | 640 ± 2 dB |
| Auto Search Stop Level | (μV) | 6 | 6 ± 6 dB |
| Muting Sensitivity | (μV) | 5 | 5 ± 6 dB |
| Frequency Response at 10 kHz | (dB) | −13.66 | −13.66 ± 2 dB |
| Temperature Range for Satisfactory Operation | (degree C) | | 0-45 |

All Sets must meet radiation regulation requirements (FCC).
Frequency response must meet the 75 μsec de-emphasis.

## FM MPX SECTION

1. Output readings are taken across a non-reactive 47K load termination.
2. Output is measured at TAPE OUT 1 terminals.
3. The signal voltage in this specification is the voltage appearing across the tuner input terminals (IHF).
4. Standard Deviation :

| | |
|---|---|
| Main carrier (L + R) | 33.75 kHz (45%) |
| Sub carrier (L − R) | 33.75 kHz (45%) |
| 19 kHz Pilot | 6 kHz (8%) |
| Modulation Frequency | 1000 Hz |

| | UNIT | NOMINAL | LIMIT |
|---|---|---|---|
| Stereo Indicator Sensitivity | (μV) | 5 | 5 ± 6 dB |
| Stereo Separation at 1 mV Input | | | |
| at 100 Hz | (dB) | 35 | 30 |
| at 1 kHz | (dB) | 48 | 33 |
| at 10 kHz | (dB) | 33 | 28 |
| Stereo Distortion at 1 mV Input | (%) | 0.3 | 0.7 |
| Sub Carrier Rejection Ratio | (dB) | 60 | 54 |
| SCA Rejection Ratio | (dB) | 60 | 54 |
| Stereo Tape Out Level | (mV) | 580 | 580 ± 2 dB |
| FM MPX Filter (Separation at 10 kHz) | (dB) | 10 | 10 ± 2.5 |

## AUDIO SECTION

| | | UNIT | NOMINAL | LIMIT |
|---|---|---|---|---|
| Input Impedance | PHONO | (KΩ) | 50 | ---- |
| | AUX | (KΩ) | 50 | ---- |
| | TAPE IN 1 | (KΩ) | 50 | ---- |
| | TAPE IN 2 | (KΩ) | 50 | ---- |
| Output Power THD 0.05% Both Channels Driven from 20 Hz to 20 kHz into 8 Ω load | | (W) | 55 | 50 |
| Output Power 0.05% THD Both Channels Driven at 1 kHz into 8 Ω Load | | (W) | 58 | 53 |
| IM Distortion at 30W Output Power | | (%) | 0.02 | 0.05 |

| | | | |
|---|---|---|---|
| Sensitivity for Rated Power at 8 Ω | | | |
| PHONO | (mV) | 2.2 | 2.2 ± 3 dB |
| AUX | (mV) | 160 | 160 ± 3 dB |
| TAPE IN 1 | (mV) | 160 | 160 ± 3 dB |
| TAPE IN 2 | (mV) | 160 | 160 ± 3 dB |
| Frequency Response at AUX, 1W from 20 Hz to 20 kHz | (dB) | Flat | ---- |
| Bass Action at 100 Hz | (dB) | ± 10 | ± 10 ± 2.5 |
| Midrange Action at 1.5 kHz | (dB) | ± 6 | ± 6 ± 2.5 |
| Treble Action at 10 kHz | (dB) | ± 10 | ± 10 ± 2.5 |
| Minimum Volume Hum and Noise | (mV) | 1 | 2 |
| Signal to Noise Ratio ("A" weighted) | | | |
| PHONO (Input shorted/Input level at 10 mV) | (dB) | 85 | 80 |
| AUX (Input shorted) | (dB) | 95 | 90 |
| TAPE IN 1 (Input shorted) | (dB) | 95 | 90 |
| TAPE IN 2 (Input shorted) | (dB) | 95 | 90 |
| Cross Talk at 1 kHz, AUX (Input 4.7 K Ω termination) | (dB) | 55 | 45 |
| Bass Compensation at 100 Hz (−30 dB volume) | (dB) | + 6 | + 6 ± 2.5 |
| at 10 kHz (−30 dB volume) | (dB) | + 4.5 | + 4.5 ± 2.5 |
| Level Difference of Each Channel at Volume max. | (dB) | 0 | ± 2 |
| Tape Out Level (RCA Jack) (47 K Ω termination) | | | |
| PHONO (2.2 mV Input) | (mV) | 140 | 140 ± 3 dB |
| AUX (160 mV Input) | (mV) | 140 | 140 ± 3 dB |
| TAPE IN 1 (160 mV Input) | (mV) | 140 | 140 ± 3 dB |
| TAPE IN 2 (160 mV Input) | (mV) | 140 | 140 ± 3 dB |
| PHONO EQ. Response at 20 Hz | (dB) | RIAA | RIAA ± 1 dB |
| at 20 kHz | (dB) | RIAA | RIAA ± 1 dB |
| PHONO Overload at 1 kHz (THD : 0.5%) | (mV) | 170 | 140 |
| Tape Out Level (DIN Jack) (3.3 K Ω termination) | | | |
| AM : 400 Hz, 30% mod. 5 mV/m input | (mV) | 3.3 | 3.3 ± 2.5 dB |
| FM : 1000 Hz, 22.5 kHz dev. 1 mV input | (mV) | 3.3 | 3.3 ± 2.5 dB |
| PHONO : 3.3 mV input | (mV) | 3.3 | 3.3 ± 2.5 dB |
| AUX : 250 mV input | (mV) | 3.3 | 3.3 ± 2.5 dB |
| DC Balance | (mV) | 0 | ± 50 |
| Low Filter at 50 Hz | (dB) | −3 | $-3\ ^{+1}_{-2}$ |
| High Filter at 10 kHz | (dB) | −6 | −6 ± 2 dB |

**Notes:**
1. The supply voltage is 120 V AC, 60 Hz (UL, C.S.A.) (240 V AC, 50 Hz for Australian) from a regulated power supply.
2. The power source must be insulated from other equipment connected to antenna or output.
3. The room temperature is 25 degrees C.
4. Nominal Specs represent the design specs; all units should be able to approximate these — some will exceed and some may drop slightly below these specs.
   Limit Specs represent the absolute worst condition which still might be considered acceptable; in no case should a unit perform to less than within any Limit Spec.

# (2) DISASSEMBLY INSTRUCTIONS

**1. To remove the Cabinet**

a) Remove two screws from each side of Cabinet (Figure A).

b) Remove three screws from upper Back Panel as shown in Figure B.
Pull off cabinet toward rear of unit.

Be careful not to lose inserts when the screws are removed.

Fig. A

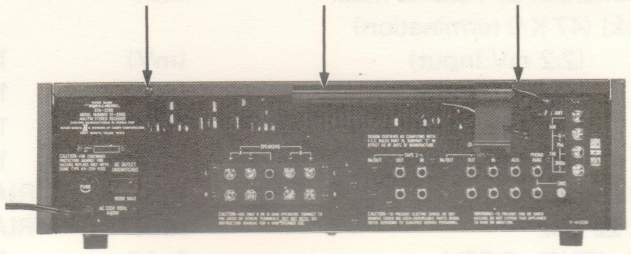

Fig. B

**2. Remove the Bottom Cover**

Turn the Receiver upside down and remove twelve screws from the bottom as shown in Figure C.

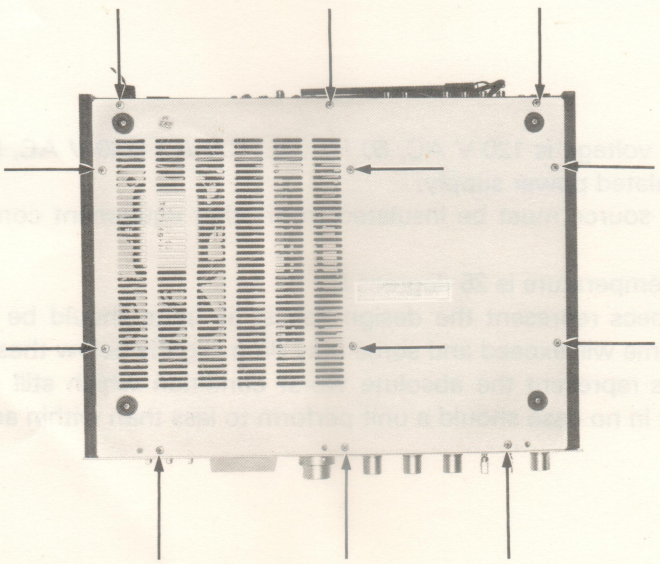

Fig. C

### 3. To remove the Front Panel

a) Remove the Cabinet and Bottom Cover as described in 1 and 2.

b) Remove three screws from top (Figure D) and three screws from bottom (Figure E) of the Front Panel.

c) Remove knobs and pull off panel.

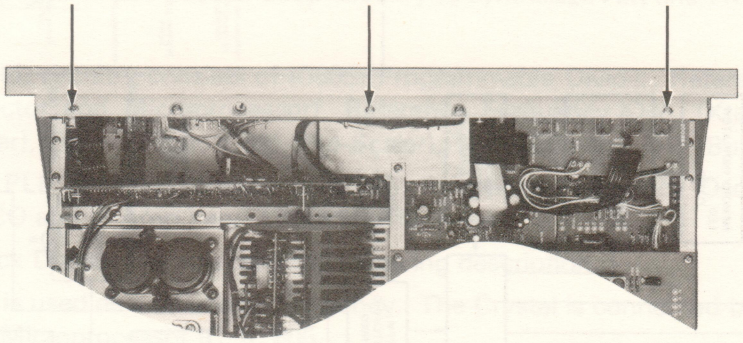

Fig. D

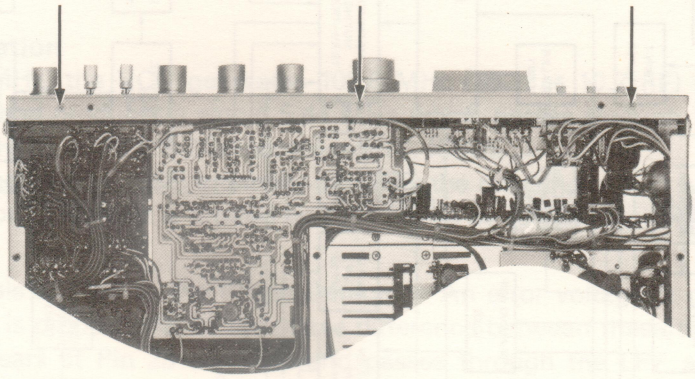

Fig. E

### 4. To remove Rear Panel from Chassis

a) Remove four screws from each side chassis of Rear Panel (two for left and two for right) as shown in Figure F ⓐ.

b) Remove two screws from center of Rear Panel (Figure F ⓑ).

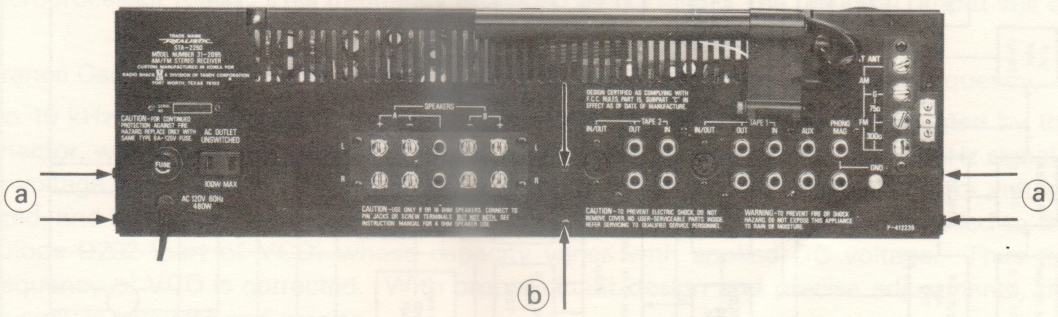


Fig. F

# (3) BLOCK DIAGRAM

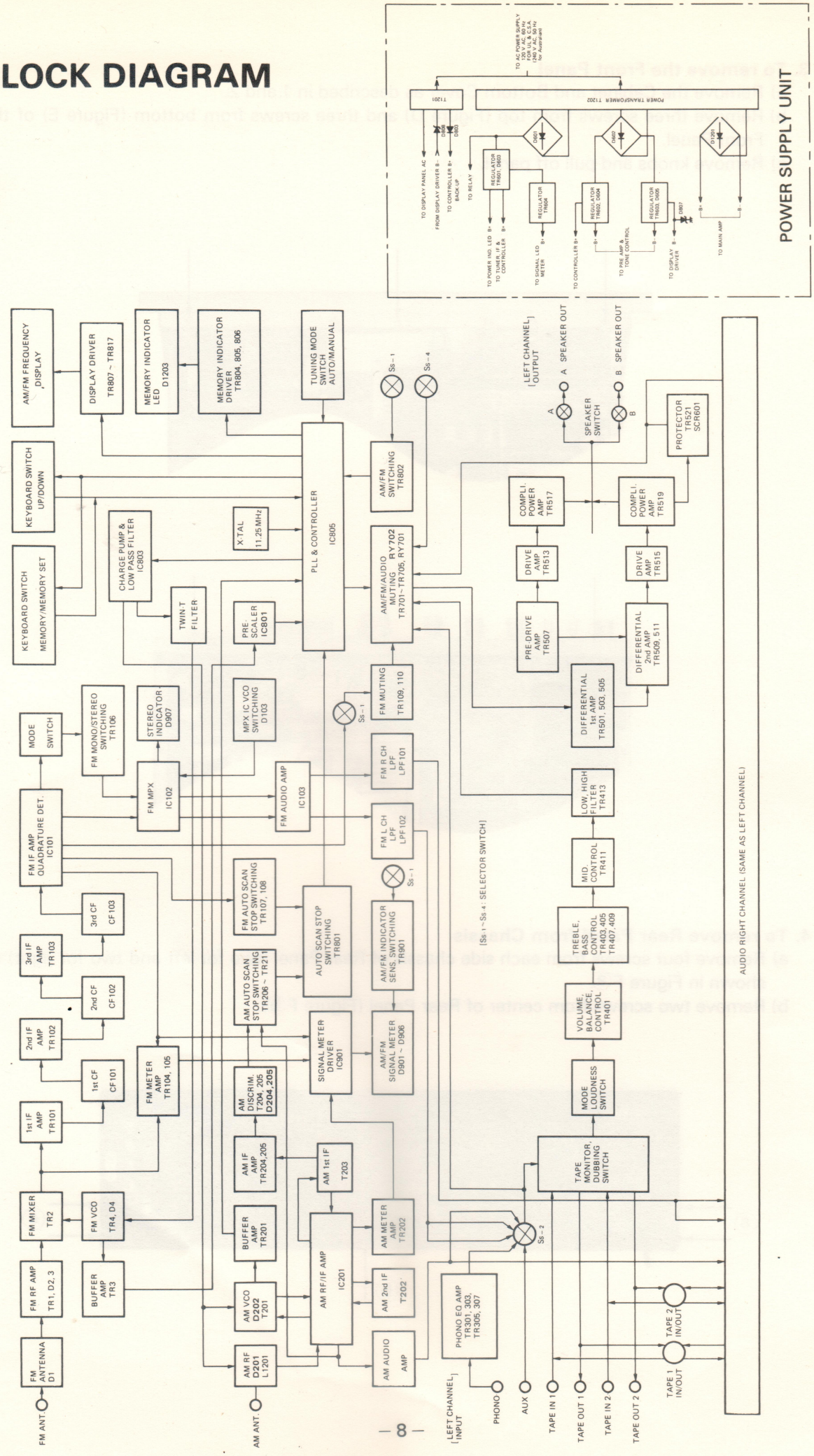

# (4) PRINCIPLES OF OPERATION

This section of the Service Manual provides a brief technical description of unique or special circuits which you might otherwise find a little hard to understand, may not notice or be able to troubleshoot.

## 1. PLL CIRCUITRY

The STA-2250 uses Digital Phase Locked Loop circuitry to synthesize AM and FM local Oscillator frequencies.

For FM mode, the PLL circuitry consists of IC805 (Programmable Divider, Reference Frequency Divider, Phase Detector and Microprocessor), Reference Frequency Osc. (Xtal: 11.52 MHz), IC803 (Low Pass Filter), Twin-T Filter, IC801 (Pre-Scaler), TR4(VCO) and TR3 (Buffer Amp).

For AM mode, the PLL circuitry consists of IC805, Reference Frequency Osc. (11.52 MHz), IC803, IC201 (AM VCO and IF Amp.) and TR201 (Buffer Amp.).

Refer to the PLL Block Diagram as you read the following description.

A 11.52 MHz Crystal is used as a reference frequency. The Crystal is connected between Pins 24 and 25 of the PLL & Microprocessor IC, IC 805.

The code determines "N", the divisor, which produces the required output frequency for each AM/FM station (precisely spaced 200 kHz apart for FM station and 10 kHz apart (9 kHz for Australian models) for AM station).

**Example of FM Operation**
When receiving 98.1 MHz, the VCO generates 108.8 MHz (98.1 + 10.7 (IF) MHz). The Pre-Scaler divides to 1/20 and produces a signal 5.44 MHz which passes through Buffer Amp TR3 which is applied to Pin 20 of PLL & Microprocessor IC, IC805.
This frequency is divided by N( = 1088) internally at IC805; the resulting output will be 5 kHz.
The Reference Oscillator 11.52 MHz is divided by 2304 (again by IC805) resulting in another 5 kHz frequency.

These two 5 kHz signals are fed to the Phase Detector. An error voltage is generated by the Phase Detector, which is proportional to the phase difference between these two 5 kHz signals. This error voltage appears at Pin 23 of IC805 and passes through the LPF and Twin-T Filter where the error voltage is integrated, and harmonics and noise are filtered out. The resulting DC voltage is applied to the Varicap Diodes (part of VCO) whose capacity varies with applied DC voltage. Thus the output frequency of VCO is corrected. With proper circuit design and precise adjustments, the VCO frequency is accurate and precise when the system is "locked", meaning the Phase Detector senses no phase differences between the two 5 kHz signals and the VCO generates a frequency which is as accurate and stable as the reference crystal oscillator.

**Example of AM Operation** (The basic PLL circuitry system is same as in FM mode.)
When receiving 1000 kHz, VCO generates a 1450 kHz signal (1000 + 450 (IF) kHz). The AM VCO output signal, 1450 kHz, which passes through Buffer Amp TR201 is applied to Pin 21 of PLL & Microprocessor IC805. This frequency is divided by N ( = 45). The resulting output will be 10 kHz.

The Reference Oscillator 11.52 MHz, is divided by 1152, resulting in another 10 kHz frequency.

These two 10 kHz signals are fed to the Phase Detector. An error voltage is generated by the Phase Detector, which is in proportion to the phase difference between these two 10 kHz signals. This error voltage appears at Pin 23 of IC805 and passes through the LPF where the error voltage is integrated, and harmonics and noise are filtered out. The resulting DC voltage is applied to the Varicap Diode D202 (part of VCO) whose capacity varies with applied DC voltage. Thus the output frequency of VCO is corrected. With proper circuit design and precise adjustments, the VCO frequency is accurate and precise.
When the system is "locked", the phase detector senses no phase differences and generates a frequency which is as accurate and stable as the reference crystal oscillator.

**NOTES:**

1. Pre-Scaler---- In FM mode, the maximum frequency of a Local Oscillator is about 120 MHz, while the Programmable Divider of IC805 operates under 7.2 MHz frequency range. Thus, the Pre-Scaler is necessary in the front stage of a Programmable Divider. The resulting FM VCO frequency is divided by 1/20 pre-scaler (4.94-5.93 MHz).
2. The value of Programmable Divider ratio "N" can be calculated as follows: (See Table on page 24 and 25)
   FM Band : N = VCO frequency (=Receiving Frequency + 10.7 MHz) ÷ 5 kHz
   --- N = 988 — 1186
   AM Band : N = VCO frequency (=Receiving Frequency +450 kHz) ÷ 10 kHz
   --- N = 98—206(UL, C.S.A. models)
   N = VCO frequency (=Receiving Frequency + 450 kHz) ÷ 9 kHz
   --- N = 109—228 (Australian models)
3. Reference Oscillator 11.52 MHz is divided by Divider of IC805.
   FM Band -----2304=11.52 MHz ÷ 5 kHz
   AM Band-----1152=11.52 MHz ÷ 10 kHz (UL, C.S.A. models)
   -----1280=11.52 MHz ÷ 9 kHz (Australian models)
4. LPF circuitry applies the DC voltage to VCO circuitry which is converted from the output signal (5 kHz for FM, 10 kHz for AM (9 kHz for Australian)) of Phase Detector (internally IC805).

## PLL CIRCUITRY BLOCK DIAGRAM

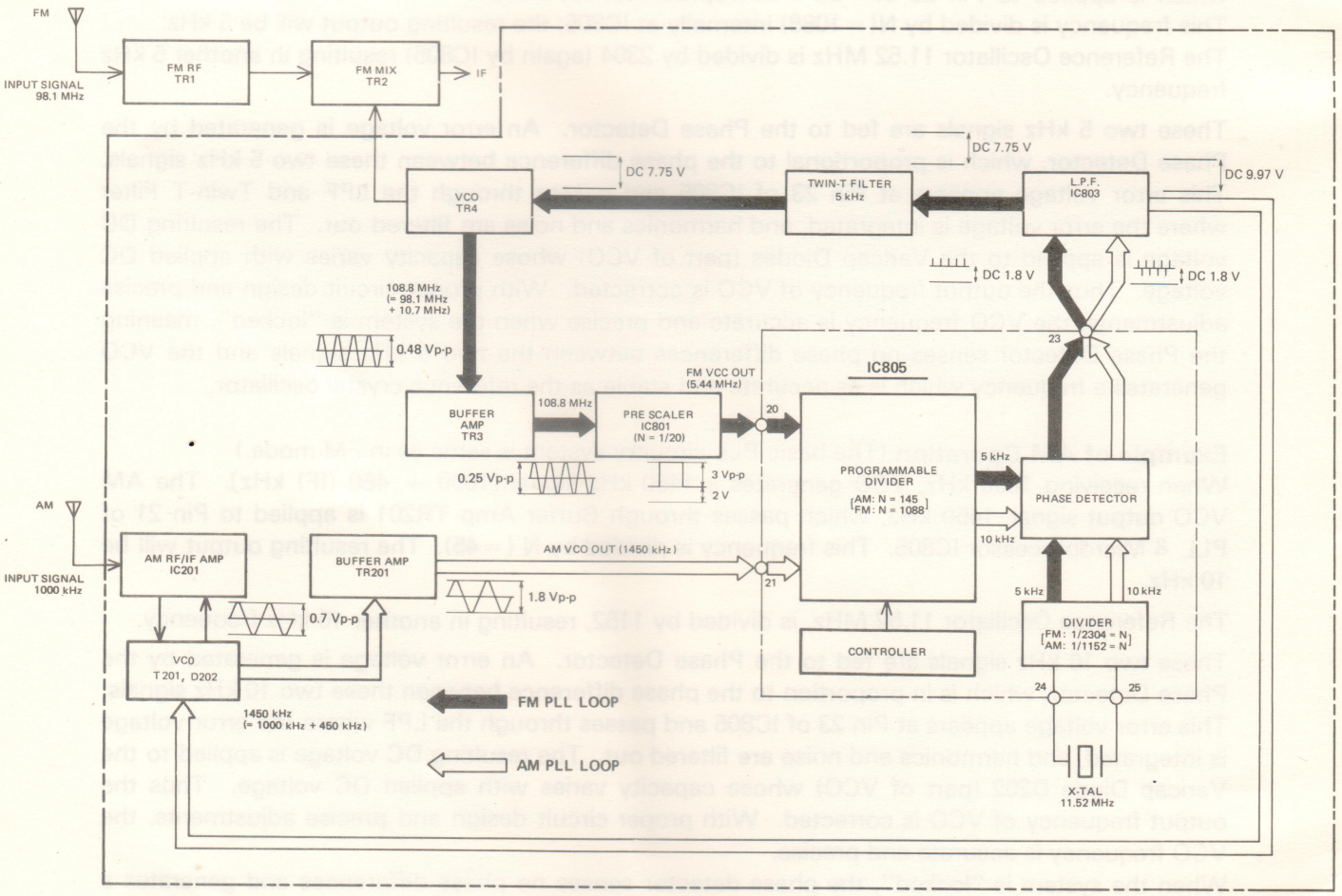

# 2-1. SCHEMATIC DIAGRAM OF MICROPROCESSOR SECTION

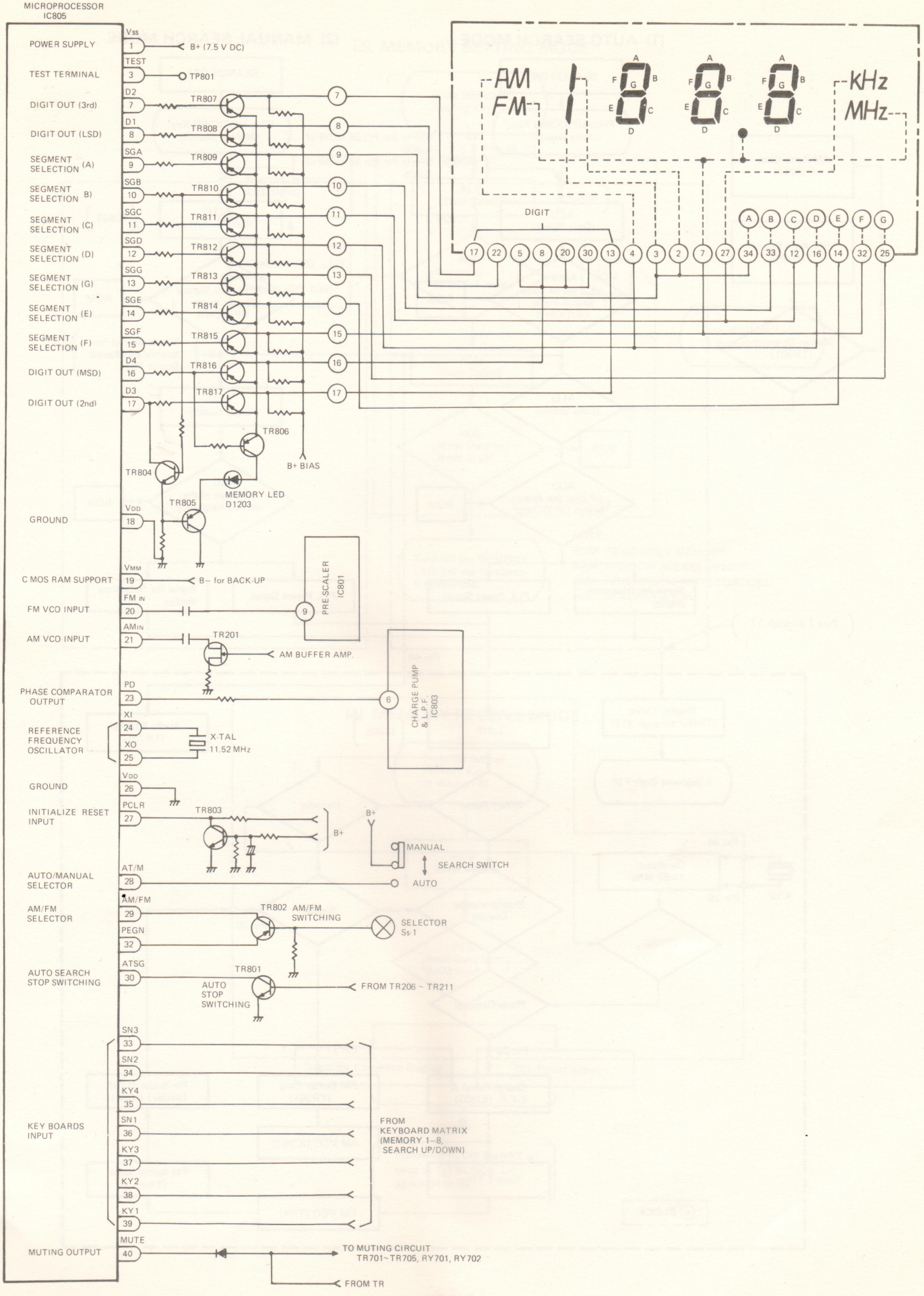

# GENERAL LOGIC FLOW CHART

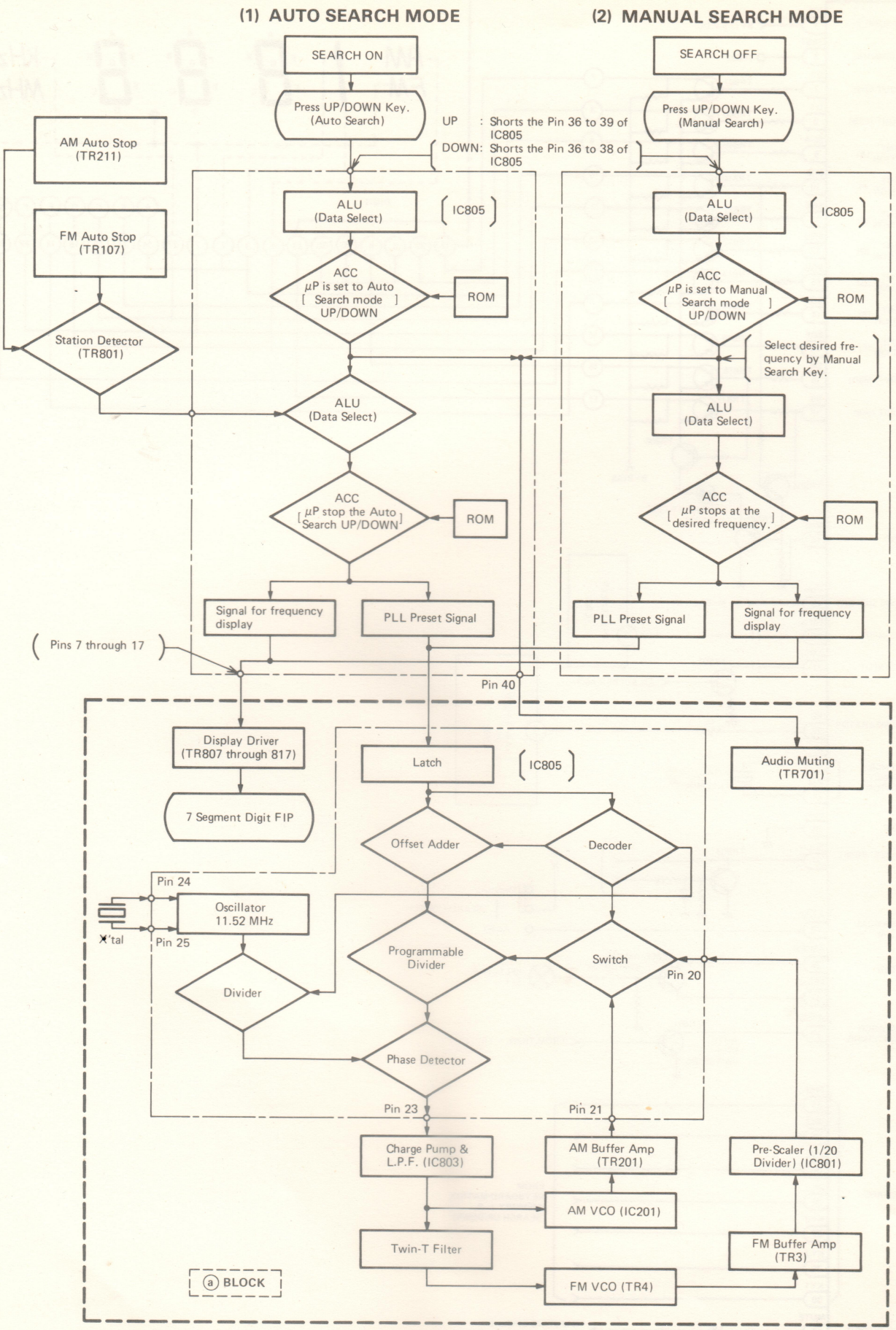

## (3) MEMORY SETTING MODE

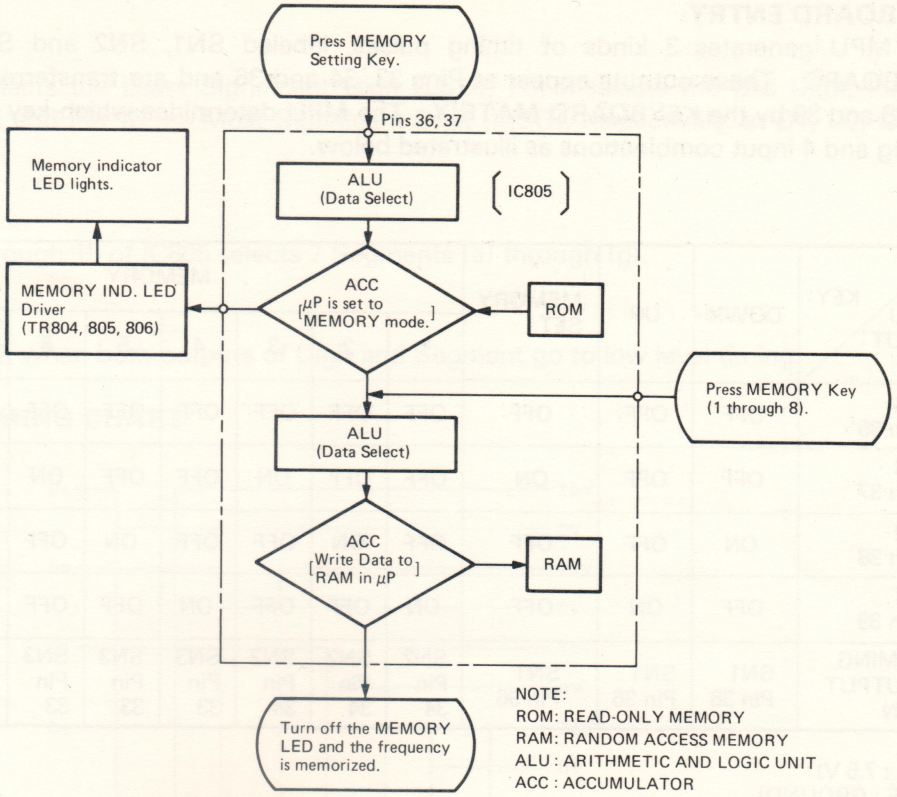


NOTE:
ROM: READ-ONLY MEMORY
RAM: RANDOM ACCESS MEMORY
ALU : ARITHMETIC AND LOGIC UNIT
ACC : ACCUMULATOR

## (4) MEMORY RECEIVE MODE

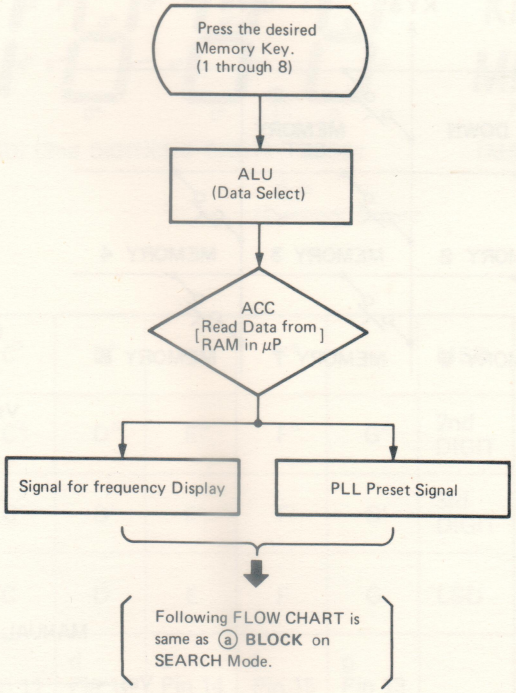

## 2-2. MICROPROCESSOR CIRCUITRY (CONTROL CIRCUIT)

The Control Circuit uses a 4-bit Microprocessor, MN6045A, which is C MOS and can be used with a power supply voltage of 7.5 volts.

### KEYBOARD ENTRY

The MPU generates 3 kinds of timing pulses, labeled SN1, SN2 and SN3 to search the KEYBOARD. These outputs appear at Pins 33, 34 and 36 and are transferred to Input Pins 35, 37, 38 and 39 by the KEYBOARD MATRIX. The MPU determines which key is pressed by input timing and 4 input combinations as illustrated below.

| KEY / MPU INPUT PIN | DOWN | UP | MEMORY SET | MEMORY | | | | | | | |
|---|---|---|---|---|---|---|---|---|---|---|---|
| | | | | 1 | 2 | 3 | 4 | 5 | 6 | 7 | 8 |
| K4 Pin 35 | OFF | OFF | OFF | OFF | OFF | OFF | OFF | OFF | OFF | ON | ON |
| K3 Pin 37 | OFF | OFF | ON | OFF | OFF | ON | OFF | OFF | ON | OFF | OFF |
| K2 Pin 38 | ON | OFF | OFF | OFF | ON | OFF | OFF | ON | OFF | OFF | OFF |
| K1 Pin 39 | OFF | ON | OFF | ON | OFF | OFF | ON | OFF | OFF | OFF | OFF |
| TIMING OUTPUT PIN | SN1 Pin 36 | SN1 Pin 36 | SN1 Pin 36 | SN2 Pin 34 | SN2 Pin 34 | SN2 Pin 34 | SN3 Pin 33 | SN3 Pin 33 | SN3 Pin 33 | SN2 Pin 34 | SN3 Pin 33 |

(ON : 7.5 V)
(OFF : GROUND)

### KEYBOARD MATRIX

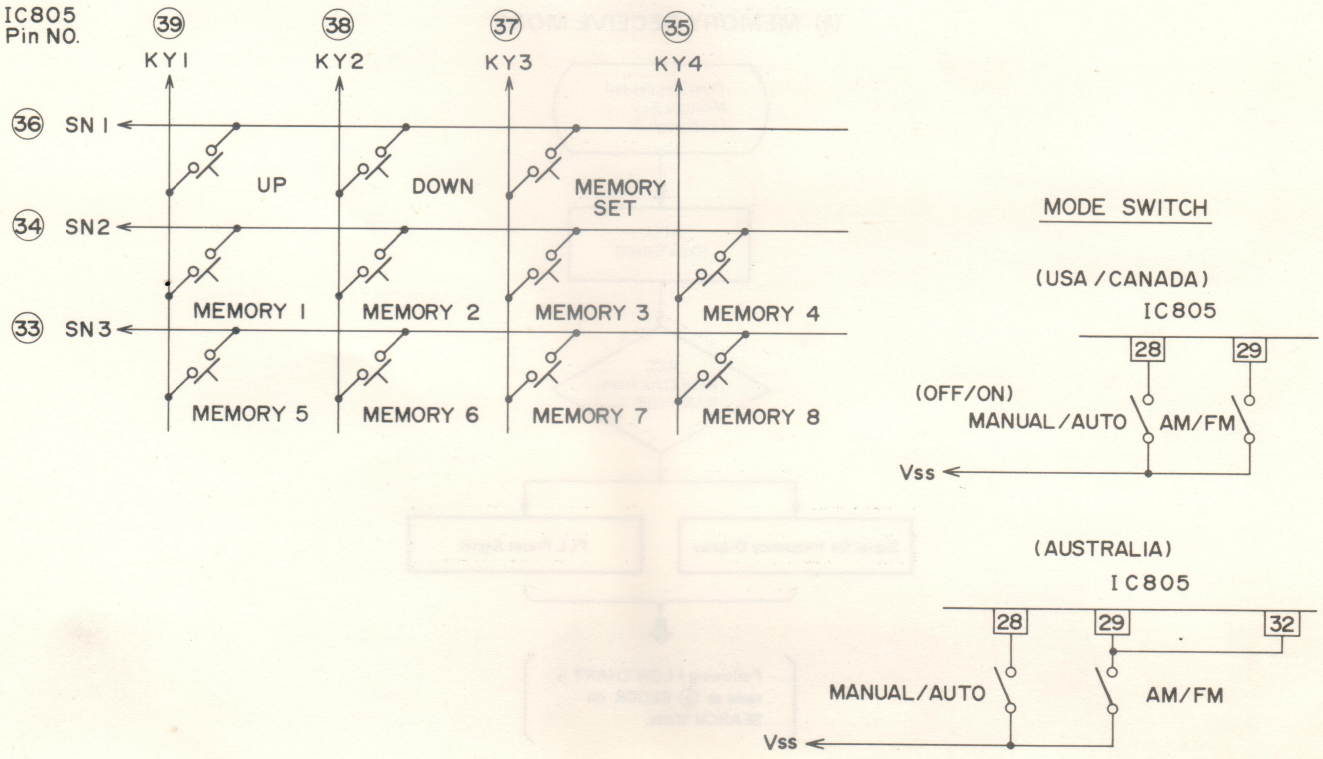

## 3. FREQUENCY DISPLAY CONTROL CIRCUIT

Frequency Display circuit consists of IC805, TR807 — TR817.
MPU IC805 sends frequency display information from Pins 7 — 17 to Pins 7 — 17 on Display P.C.B.

### Digit Section

Output of Pin 8 selects the Least Significant Digit (LSD), Pin 7 selects the 2nd Digit, Pin 17 selects the 3rd Digit and Pin 16 the Most Significant Digit (MSD), respectively, at D1, D2, D3 or D4 timing.

### Segment Section

Output of Pins 9 through 15 of IC805 selects 7 Segments (a) through (g).

### Display Indication

The Segments are lit when both outputs of Digit and Segment go to low level timing.

### IC805 OUTPUT TIMING CHART

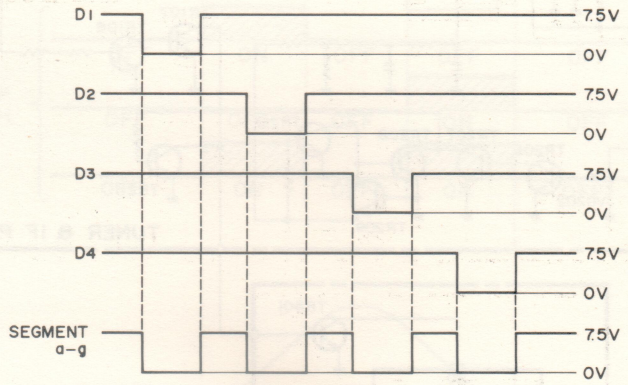


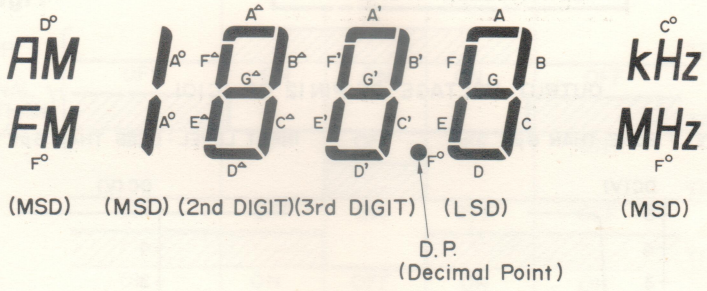


| | | | | | | | | |
|---|---|---|---|---|---|---|---|---|
| D4 PIN 16 | $A^{\circ}$ | -- | $C^{\circ}$ | $D^{\circ}$ | -- | $F^{\circ}$ | -- | MSD |
| D3 PIN 17 | $A^{\triangle}$ | $B^{\triangle}$ | $C^{\triangle}$ | $D^{\triangle}$ | $E^{\triangle}$ | $F^{\triangle}$ | $G^{\triangle}$ | 2nd DIGIT |
| D2 PIN 7 | A′ | B′ | C′ | D′ | E′ | F′ | G′ | 3rd DIGIT |
| D1 PIN 8 | A | B | C | D | E | F | G | LSD |
| MPU Pin Nos. | a Pin 9 | b Pin 10 | c Pin 11 | d Pin 12 | e Pin 14 | f Pin 15 | g Pin 13 | |

## 4. AUTO STOP CIRCUIT FOR AUTO SEARCH

The Automatic Stop circuit consists of IC101, 201, 805, TR107, 108, 202, 204—211 and TR801. Refer to Figure A.

(1) In FM Mode :

When receiving an input signal of more than 6 $\mu$V, the IF signal is applied to Pin 1 of IC101. Pin 12 of IC101 will become low (from 5V to 0V (Auto stop frequency bandwidth at ② point on Figure B)) and TR108 will be turned off. TR107 will be turned on. At the same time TR801 will be turned off.

Under these conditions, the high level (from 0V to 7.5V) is provided to Pin 30 of IC805. This causes that Auto Search mode in the microprocessor to stop. (Refer to Figures A, B and C)

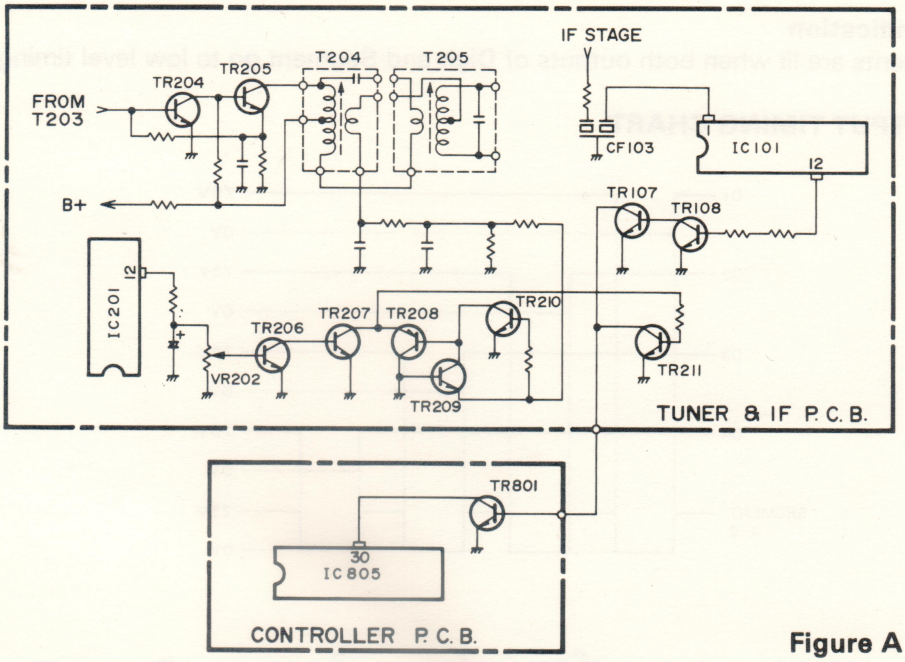


**Figure A**

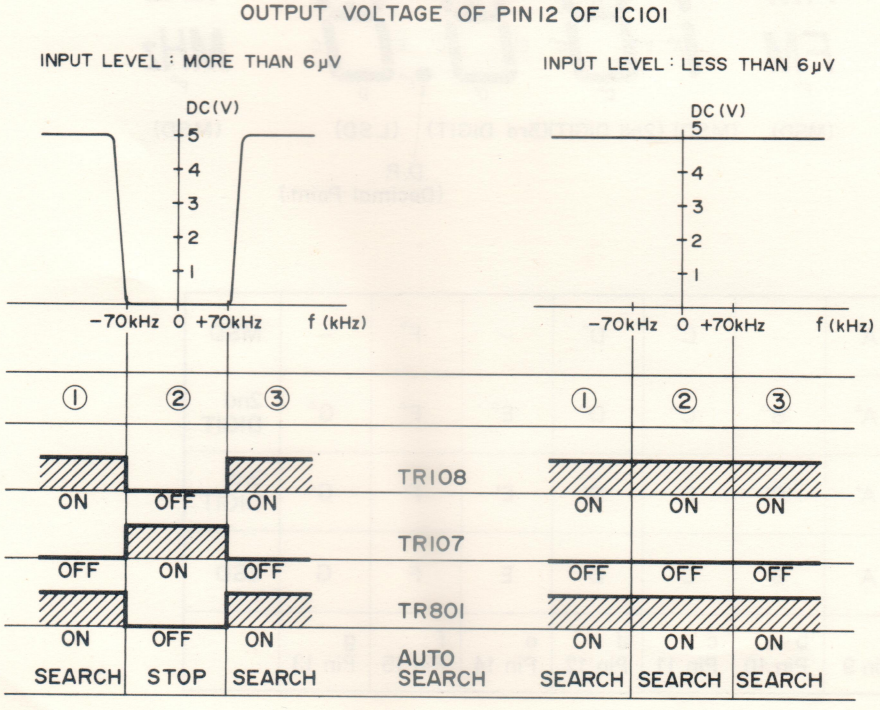


**Figure B** **Figure C**

**NOTE:** When no signal or less than 6 $\mu$V input signal is applied, Pin 12 of IC101 stays in high level (②point on Figure C).
TR108 will be kept on, TR107 will be turned off.
Thus TR801 will be turned on.
The result is Auto Stop circuit does not function.

(2) In AM Mode:

Refer to Figure A and D.

When receiving an input signal of more than 1 mV, Pin 12 of IC201 will become high level. TR206 will be turned on (②, ③ and ④ points on Figure D) and TR207 will be turned off (②, ③ and ④ points on Figure D).

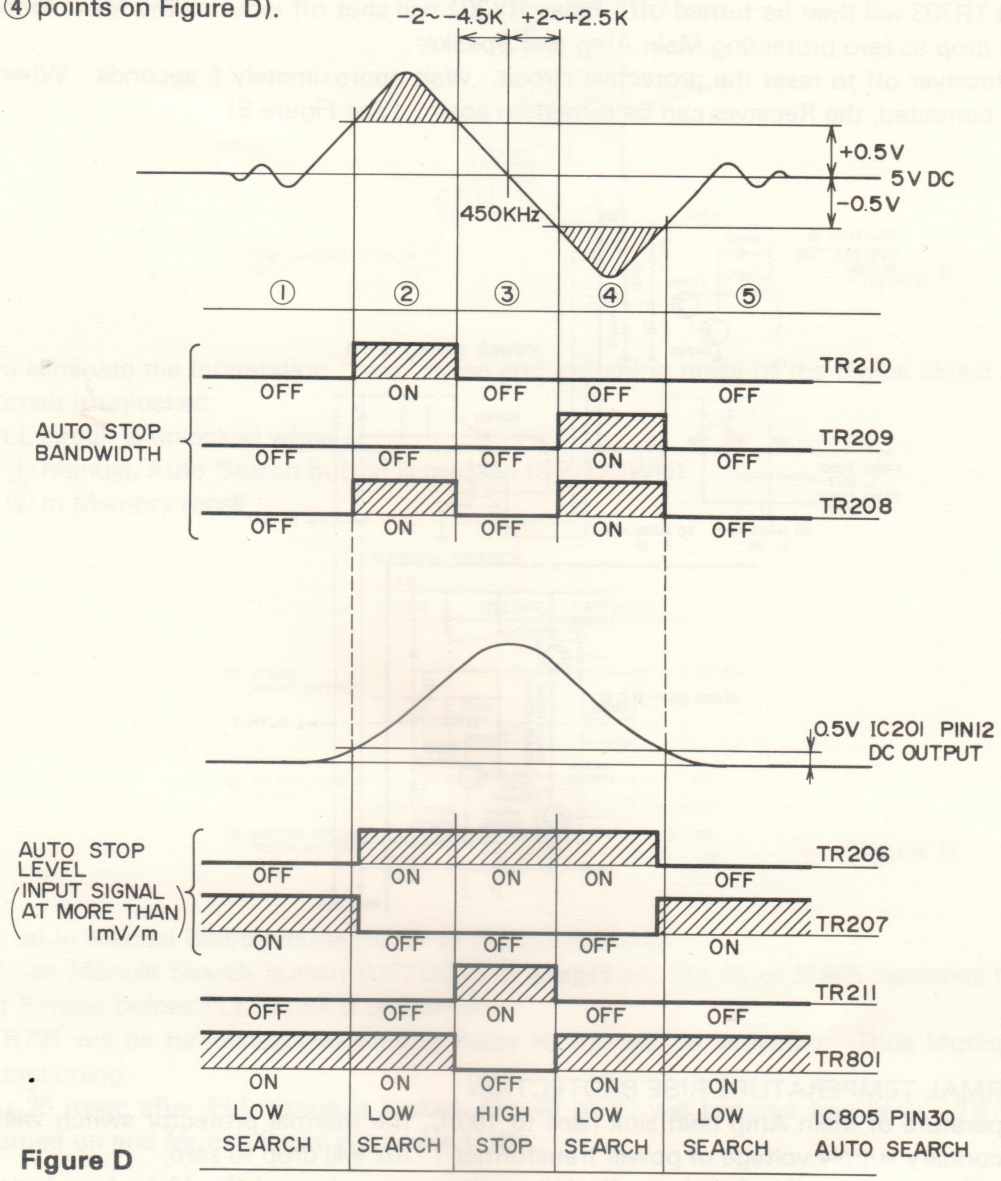


**Figure D**

Under these conditions, TR211 will turned on and TR801 will turn off. Pin 30 of IC805 will become high level. This causes the Auto Search mode in the microprocessor to stop.

**NOTE:** To prevent the Auto Stop circuit from tuning unwanted frequencies, TR210, 209 and 208 have been incorporated.
The output of the AM discriminator is provided to the emitter of TR209 and the base of TR210.
When output of the AM discriminator is over +0.5V, TR209 is turned on (②point on Figure D), and when it is under −0.5V, TR210 is turned on (④point on Figure D). These cause TR208 to turn on.
TR207 turns off whenever an input signal is higher than 1 mV/m (②, ③ and ④), but TR208 turns on at ②and ④points.
Thus Pin 30 of IC805 becomes low level.
The result is the Auto Stop circuit does not function.

## 5. PROTECTOR CIRCUIT DESCRIPTION

(1) PROTECTIVE CIRCUIT IN CASE OF SHORTED OUTPUT TERMINALS

If speaker terminals are shorted (or load impedance of one channel, left or right, is less than 4 ohms), excessively high current flows from emitter to collector of TR519 (TR520) and a high voltage appears across R541 (R542). TR521 is turned on and high voltage appears across R547 (R548). Thus high voltage goes to gate of SCR601 after being rectified by D507 (D508).

When the voltage between cathode and gate increases to about 0.7V, SCR601 will be turned on. TR702 and TR703 will then be turned off. Relay RY702 will shut off input to the Main Amp and output will drop to zero protecting Main Amp and Speaker.

Turn the Receiver off to reset the protective circuit. Wait approximately 5 seconds. When the problem is corrected, the Receiver can be turned on again. (See Figure E)

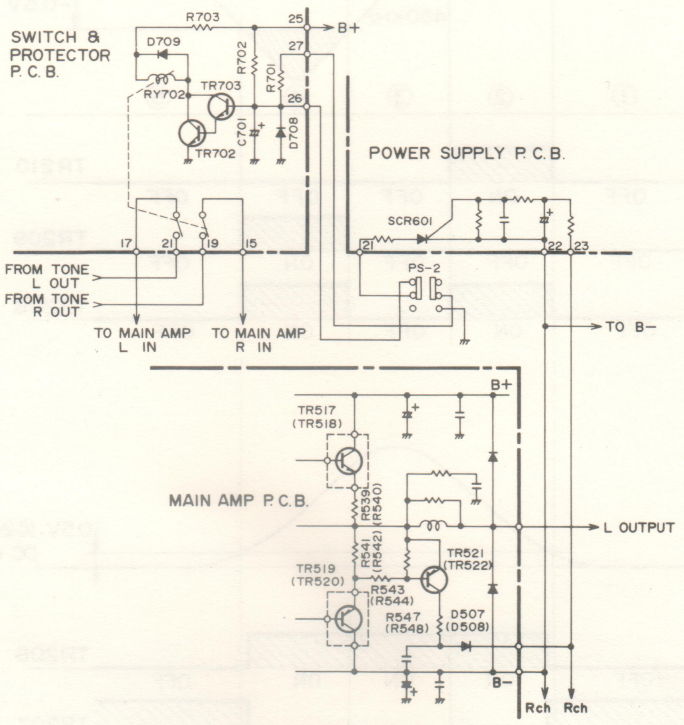


**Figure E**

(2) ABNORMAL TEMPERATURE RISE PROTECTION

If the temperature of Main Amp heat sink rises to 100°C, the thermal protector switch will shut off and secondary supply voltage of power transformer T1202 will drop to zero.

If this should occur, turn the Receiver off. When the temperature of the Main Amp heat sink falls to within the operating limits of the Receiver, the thermal protector switch will reset itself.

When the problem is corrected, the Receiver can operate again.

(3) SPEAKER PROTECTIVE CIRCUIT

With power switch "on", a 4 second signal delay is provided to the Main Amp input terminal by Relay RY702.

This is to protect speakers from switching transients.

With power switch "on", TR703 and TR702 will be turned on through time constant circuit R702 and C701. (See Figure E)

## (4) AM/FM NOISE AND SWITCHING CIRCUIT

This circuit performs two functions. (See Figure F)

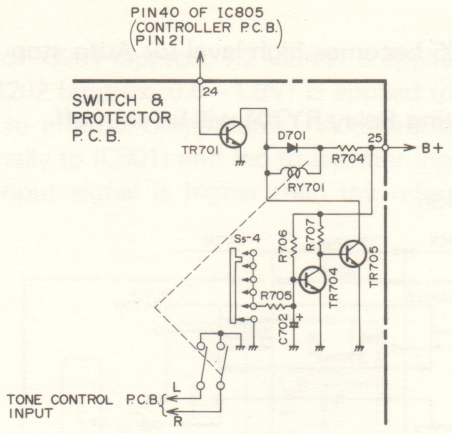


**Figure F**

A) To eliminate the interstation "hiss" noise and switching noise of the digital circuit when PLL Circuit is unlocked.
PLL circuit is unlocked when
① Manual/Auto Search button is pressed (UP/DOWN)
② In Memory recall

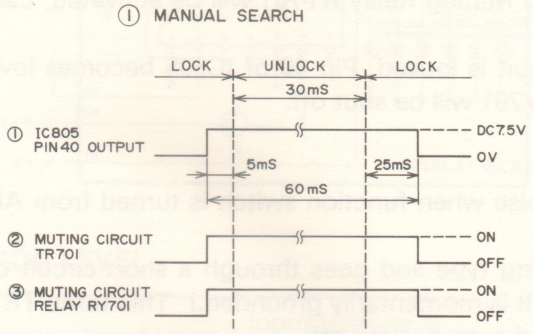


**Figure G**

(1) (a) In Manual Search mode (Refer to Figures F and G)
When Manual Search button (UP/DOWN) is pressed, Pin 40 of IC805 becomes high level at 5 msec before PLL circuit is unlocked.
TR701 will be turned on and Muting Relay RY701 will be activated. Thus Muting circuit is functioning.
At 25 msec after PLL circuit is locked, Pin 40 of IC will become low level. TR701 will be turned on and Muting Relay will be shut off.

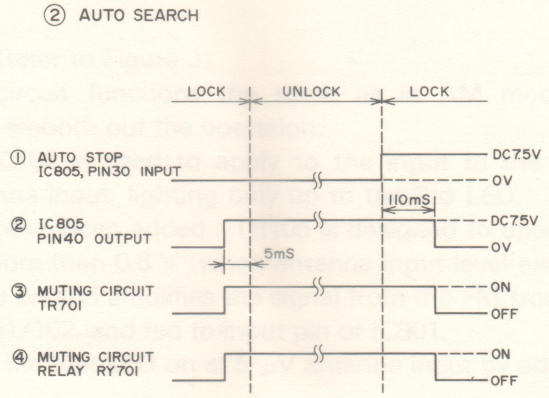


**Figure H**

(b) In Auto Search mode (Refer to Figures F and H)
When Manual Search button (UP/DOWN) is pressed, Pin 40 of IC805 becomes high level at 5 msec before PLL circuit is unlocked.
TR701 will be turned on and Muting Relay RY701 will be activated. Thus Muting circuit will function.
At 110 msec after Pin 30 of IC805 becomes high level (or Auto stop is functioned), Pin 40 of IC805 becomes low level.
TR701 will be turned off and Muting Relay RY701 will be shut off.

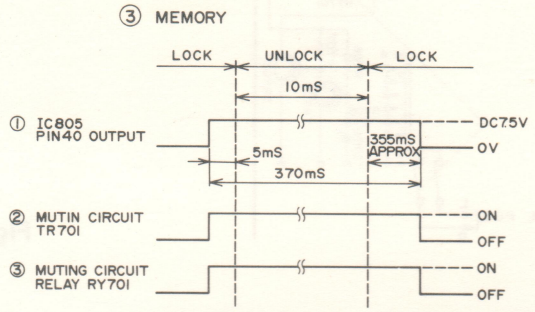


**Figure I**

(2) In Memory Recall mode (Refer to Figures F and I)
When Memory button (1 through 8) is pressed, Pin 40 OF IC805 becomes high level at 5 msec before PLL circuit is unlocked.
TR701 will be turned on and Muting Relay RY701 will be activated, causing Muting circuit to function.
At 355 msec after PLL circuit is locked, Pin 40 of IC805 becomes low level. TR701 will be turned off, Muting Relay RY701 will be shut off.

B) To eliminate the clicking noise when function switch is turned from AM to FM (or FM Mute to PHONO, etc.).
The switch Ss-4 is a shorting type and goes through a short-circuit condition when tuning from 1(AM) to 2(FM), etc. (It is momentarily grounded.) This turns TR704 off and TR705 on. Relay RY701 is activated and output is cut off.
The time constant of R706 and C702 allows the cut off condition to last for about 0.5 second (before C702 changes up to a point where TR704 turns on again, etc.). (Figure E)

## 6. SIGNAL LEVEL METER DESCRIPTION

AM/FM Signal Meter circuit consists of Comparator IC IC901 and LEDs D902 through D906.

(1) AM SIGNAL METER

AGC voltage from Pin 14 of IC201 (approx. 1.2—2.4V) is applied to the base of TR202.
The emitter voltage of TR202 (approx. 0.6—1.8V) is applied to the Pin 2 of IC901 after being set by VR202. It is applied to internal comparator. A reference voltage is inputted from Pin 4, divided by resistors (internally to IC901) and fed to another input of each comparator. Each LED lights when the level of input signal is higher than the reference voltage of each comparator. (Figure J)

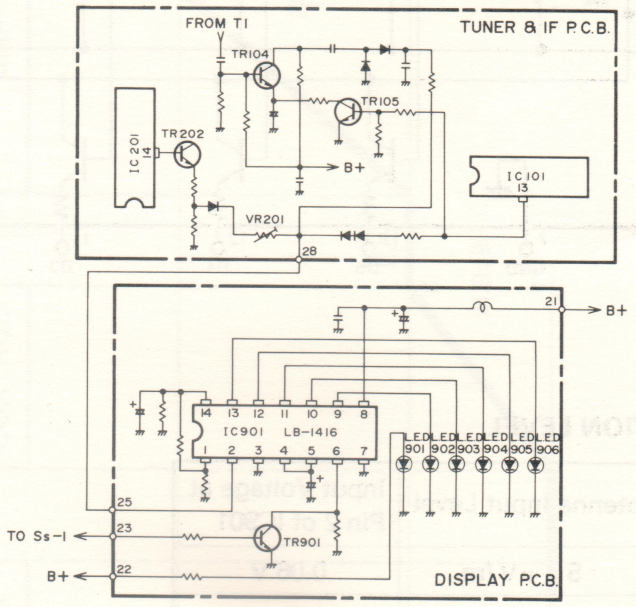


**Figure J**

### LED METER INDICATION LEVEL

| Signal Meter LED | Antenna Input Level | Input Voltage at Pin 2 of IC901 |
|---|---|---|
| D902 | 141 $\mu$V/m | 0.03 V |
| D903 | 316 $\mu$V/m | 0.05 V |
| D904 | 562 $\mu$V/m | 0.09 V |
| D905 | 891 $\mu$V/m | 0.12 V |
| D906 | 15.9 mV/m | 0.17 V |

(2) FM SIGNAL METER (Refer to Figure J)

Basically, Signal Meter circuit functions the same as in AM mode, but several additional components are added to smooth out the operation.
Output from Pin 13 of IC101 is used to apply to the input to the IC901, but this output is saturated at 250 $\mu$V antenna input, lighting only up to the 3rd LED. So, for more than 250 $\mu$V input, TR104 and TR105 have been added. TR105 is designed to operate when the output level from Pin 13 of IC101 is more than 0.6 V (when antenna input level exceeds 250 $\mu$V). As TR105 turns on, TR104 also turns on and amplifies the signal from the FM front-end output. This signal is further rectified by) D101/102, and fed to input pin of IC901.
VR901 is provided to turn the first LED on at 5 $\mu$V antenna input by adjusting the reference input voltage of IC901.

## LB 1416 BLOCK DIAGRAM

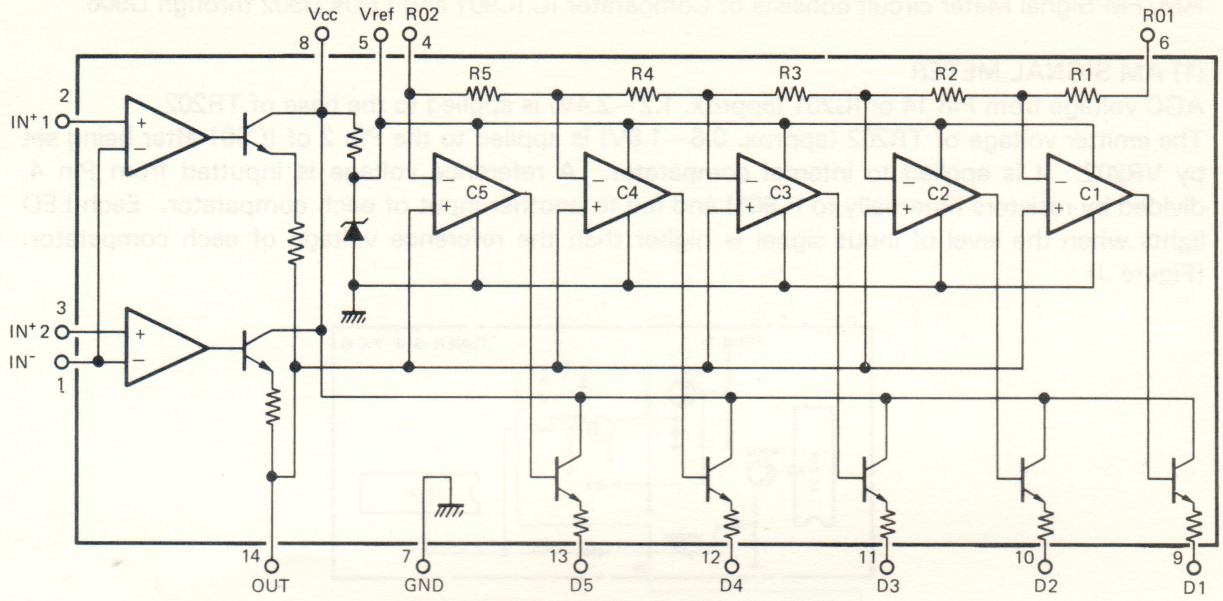


## LED METER INDICATION LEVEL

| Signal Meter LED | Antenna Input Level | Input Voltage at Pin 2 of IC901 |
|---|---|---|
| D902 | 5 μV/m | 0.06 V |
| D903 | 12.6 μV/m | 0.08 V |
| D904 | 35.5 μV/m | 0.11 V |
| D905 | 1.99 mV/m | 0.13 V |
| D906 | 3.55 mV/m | 0.17 V |

# (5) LEVEL DIAGRAM

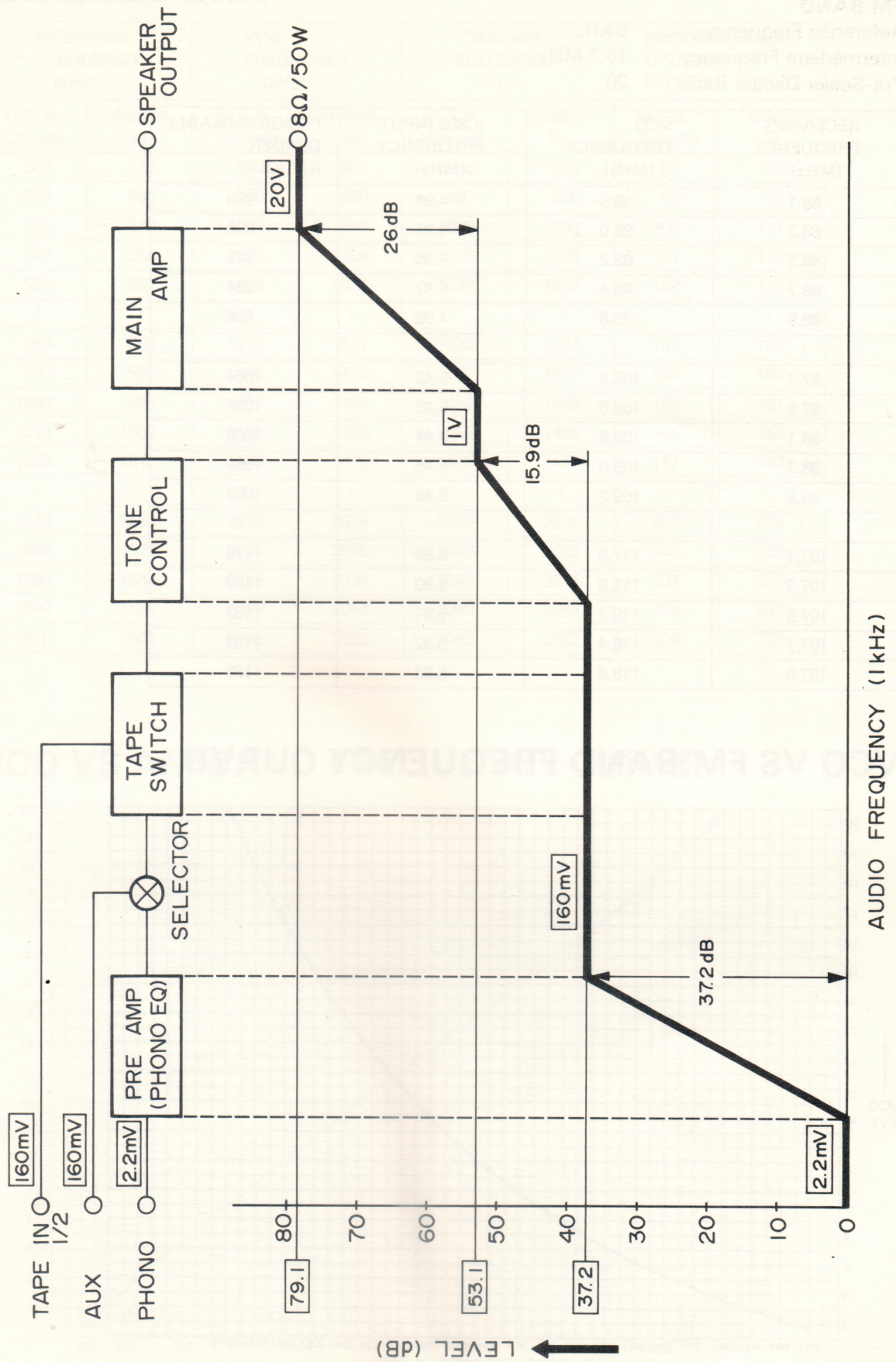

# (6) VCO OUTPUT FREQUENCY, IC805 INPUT FREQUENCY AND CODE TABLE

**1. FM BAND**

Reference Frequency : 5 kHz
Intermediate Frequency : 10.7 MHz
Pre-Scaler Divider Ratio : 20

| RECEIVING FREQUENCY (MHz) | VCO FREQUENCY (MHz) | IC805 INPUT FREQUENCY (MHz) | PROGRAMMABLE DIVIDER RATIO |
|---|---|---|---|
| 88.1 | 98.8 | 4.94 | 988 |
| 88.3 | 99.0 | 4.95 | 990 |
| 88.5 | 99.2 | 4.96 | 992 |
| 88.7 | 99.4 | 4.97 | 994 |
| 88.9 | 99.6 | 4.98 | 996 |
| ⟆ | ⟆ | ⟆ | ⟆ |
| 97.7 | 108.4 | 5.42 | 1084 |
| 97.9 | 108.6 | 5.43 | 1086 |
| 98.1 | 108.8 | 5.44 | 1088 |
| 98.3 | 109.0 | 5.45 | 1090 |
| 98.5 | 109.2 | 5.46 | 1092 |
| ⟆ | ⟆ | ⟆ | ⟆ |
| 107.1 | 117.8 | 5.89 | 1178 |
| 107.3 | 118.0 | 5.90 | 1180 |
| 107.5 | 118.2 | 5.91 | 1182 |
| 107.7 | 118.4 | 5.92 | 1184 |
| 107.9 | 118.6 | 5.93 | 1186 |

# (7) VCO VS FM BAND FREQUENCY CURVE

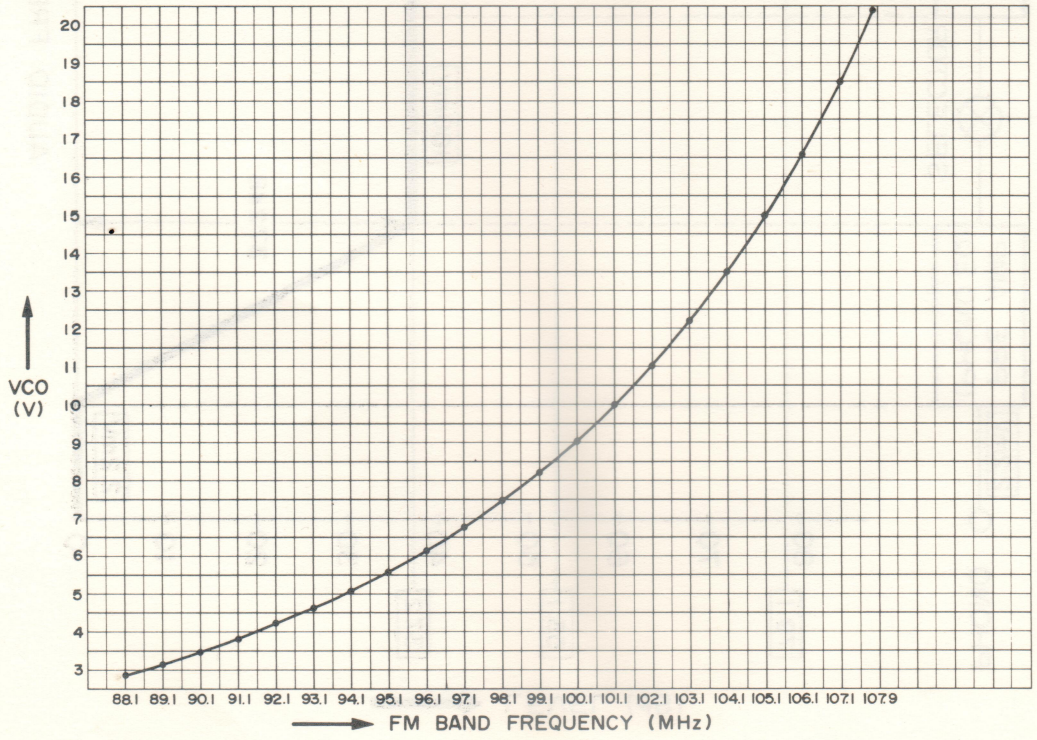

## 2. AM BAND

Reference Frequency : 10 kHz (U.S.A., Canada), 9 kHz (Australia)
Intermediate Frequency : 450 kHz

| RECEIVING FREQUENCY (kHz) | | VCO FREQUENCY (kHz) | | IC805 INPUT FREQUENCY (kHz) | | PROGRAMMABLE DIVIDER RATIO | |
|---|---|---|---|---|---|---|---|
| U.S.A. Canada | Austra-lia | U.S.A. Canada | Austra-lia | U.S.A. Canada | Austra-lia | U.S.A. Canada | Austra-lia |
| 530 | 531 | 980 | 981 | 980 | 981 | 98 | 109 |
| 540 | 540 | 990 | 990 | 990 | 990 | 99 | 110 |
| 550 | 549 | 1000 | 999 | 1000 | 999 | 100 | 111 |
| 560 | 558 | 1010 | 1008 | 1010 | 1008 | 101 | 112 |
| 570 | 567 | 1020 | 1017 | 1020 | 1017 | 102 | 113 |
| ⌇ | ⌇ | ⌇ | ⌇ | ⌇ | ⌇ | ⌇ | ⌇ |
| 980 | 981 | 1430 | 1431 | 1430 | 1431 | 143 | 159 |
| 990 | 990 | 1440 | 1440 | 1440 | 1440 | 144 | 160 |
| 1000 | 999 | 1450 | 1449 | 1450 | 1449 | 145 | 161 |
| 1010 | 1008 | 1460 | 1458 | 1460 | 1458 | 146 | 162 |
| 1020 | 1017 | 1470 | 1479 | 1470 | 1479 | 147 | 163 |
| ⌇ | ⌇ | ⌇ | ⌇ | ⌇ | ⌇ | ⌇ | ⌇ |
| 1570 | 1566 | 2020 | 2016 | 2020 | 2016 | 202 | 224 |
| 1580 | 1575 | 2030 | 2025 | 2030 | 2025 | 203 | 225 |
| 1590 | 1584 | 2040 | 2034 | 2040 | 2034 | 204 | 226 |
| 1600 | 1593 | 2050 | 2043 | 2050 | 2043 | 205 | 227 |
| 1610 | 1602 | 2060 | 2052 | 2060 | 2052 | 206 | 228 |

# (8) VCO VS AM BAND FREQUENCY CURVE

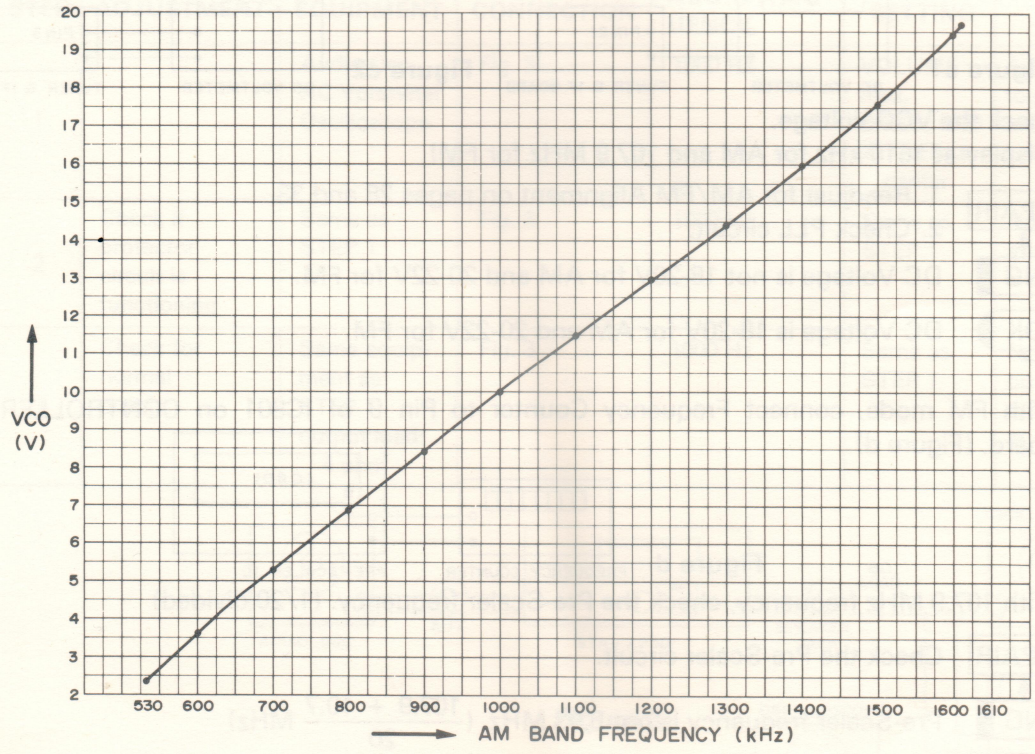

# (9) AM/FM PLL CIRCUIT OPERATION CHECK

Refer to PLL CIRCUITRY BLOCK DIAGRAM on page 10.

START

**CONNECTION 1** — Connect the Frequency Counter to TP801 on CONTROLLER PCB. (Refer to Figure a.)

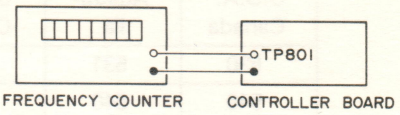


**Figure a**

**STEP 1** — Check the Reference Frequency.

- REPAIR: 1. Check the Crystal (11.52 MHz). 2. Check/Replace C824 or C825. 3. Check IC805.
- OK? → NG: Frequency does not fall within 45 kHz ± 3 Hz.
- OK: Frequency falls within 45 kHz ± 3 Hz.

**CONNECTION 2**

1. AM Mode -- Connect the Frequency Counter to Pin 18 on TUNER & IF Board. (Figure b1)
2. FM Mode -- Connect the Frequency Counter to Pin 5 on TUNER & IF Board. (Figure b2)

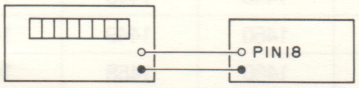


**Figure b1**

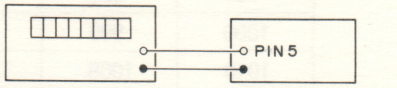


**Figure b2**

**STEP 2** — Check the VCO Frequency.
(Display at 1610 kHz for AM and at 107.9 MHz for FM and with no signal).

- REPAIR: 1. Readjust for alignment (See page 27). 2. Check the PLL circuit.
- OK? → NG: VCO Frequency is not 2060 kHz for AM and 118.6 MHz for FM.
- OK: VCO Frequency is 2060 kHz for AM and 118.6 MHz for FM.

**CONNECTION 3**

AM: Connect DC Voltmeter to Pin 21 on TUNER & IF Board. (Figure c1)
FM: Connect DC Voltmeter to Pin 3 on TUNER & IF Board. (Figure c2)

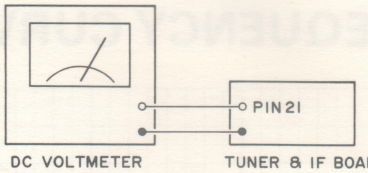


**Figure c1**

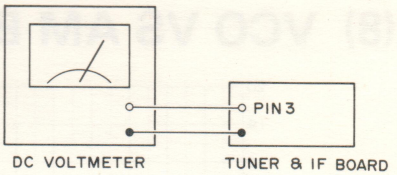


**Figure c2**

**STEP 3** — Check the VCO voltage.
(Display at 1610 kHz for AM and 107.9 MHz for FM)

- REPAIR: 1. Readjust for AM/FM Alignment on pages 28 and 33. 2. Check PLL circuit.
- OK? → NG: DC Voltage is not 18-20V for AM and 20-22V for FM.
- OK: DC Voltage is 18-20V for AM and 20-22V for FM.

**CONNECTION 4** — With FM mode, connect Frequency Counter to Pin 9 of IC801 on CONTROLLER Board. (Figure d)

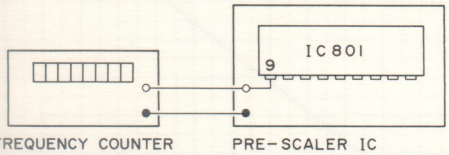


**Figure d**

**STEP 4** — With 107.9 MHz frequency, check the Pre-Scaler frequency. (1/20 divided)

- REPAIR: Check the Pre-Scaler circuit.
- OK? → NG: Pre-Scaler frequency is not 5.93 MHz ($\frac{107.9 + 10.7}{20}$ MHz)
- OK: Pre-Scaler frequency is 5.93 MHz.

END

# (10) ALIGNMENT INSTRUCTIONS

## AUDIO CIRCUIT ADJUSTMENT/CHECK

### EQUIPMENT REQUIRED

1. DC Voltmeter
2. Audio Oscillator
3. Oscilloscope
4. AC Voltmeter

**NOTE:**

- Maintain voltage at 120 volts, 60 Hz AC. (UL, C.S.A.) (240 V AC, 50 Hz for Australian)
- Set SELECTOR switch to AUX.
- Set Mode switch to Stereo.
- See P.C.B. illustration for alignment points/adjustments.

For location of connection points and trimmer resistors, see P.C.B. view.

### MAIN AMP ADJUSTMENT/CHECK

| STEP | ADJUSTMENT | EQUIPMENT | CONNEC-TION | AUDIO FREQ. | LEVEL | ADJUSTMENT |
|---|---|---|---|---|---|---|
| 1 | Check balance by measuring DC voltage across Output terminal of L and R channel. | DC voltmeter | See Fig. 1 | No signal | DC voltage should be within ±50 mV. | ---- |
| 2 | Idling current adjustment | DC voltmeter | See Fig. 2 | No signal | Adjust voltage across emitter resistors R541 (L ch) and R542 (R ch) to 10 mV ± 2 mV (8 ohm load) | VR501 (L ch) VR502 (R ch) |

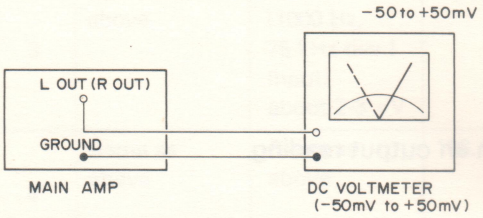


Figure 1

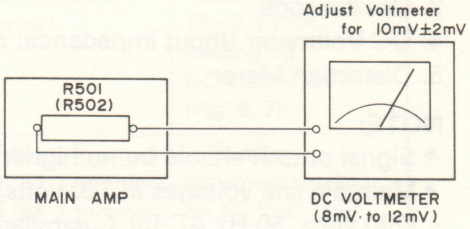


Figure 2

### PROTECTOR CIRCUIT CHECK

| STEP | ADJUSTMENT | EQUIPMENT | CONNECTION | AUDIO FREQ-UENCY | SETTING | LEVEL |
|---|---|---|---|---|---|---|
| 1 | | Audio Osc. AC Voltmeter Oscilloscope | Fig. 3 | 1000 Hz | VOLUME : max. BASS, MID & TREBLE: center | Adjust input to AUX to get output level of 2 volts (8 ohm load). |
| 2 | Check if protector circuit is functioning | Same as STEP 1 | Fig. 3 | 1000 Hz | Same as STEP 1 | No output signal after output terminal is shorted. (Fig. 4) |
| 3 | Check for normal output | Same equipment as STEP 1. output load: 4 ohm | Fig. 3 | 1000 Hz | Same as STEP 1 | Normal output after output signal is driven into clipping at 4 ohm load. |

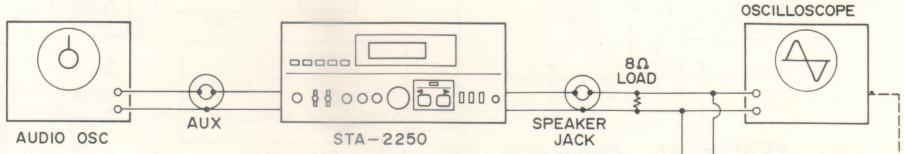


Figure 3

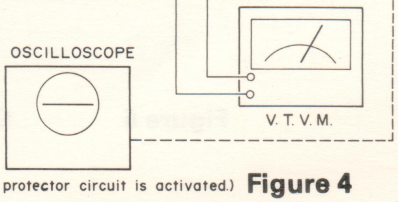


(When protector circuit is activated.) Figure 4

## PLL REFERENCE FREQUENCY CHECK

### EQUIPMENT REQUIRED

1. Frequency Counter

**NOTE:**

- Set the desired SELECTOR position.
- Maintain voltage at 120 volts, 60 Hz AC. (UL, C.S.A.)
  (240 volts, 50 Hz AC for Australian)

| EQUIPMENT | CONNECTION | AUDIO FREQUENCY | CHECK | REMARKS |
|---|---|---|---|---|
| Frequency Counter | Connect Frequency Counter to TP801 on Controller board. (Fig. 5) | No signal | Check that Frequency Counter is 45 kHz ± 3 Hz on Counter. | If necessary, select value of C824/C825 (Fig. 5) |

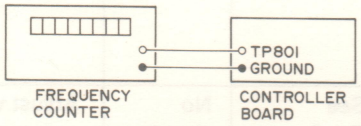


**Figure 5**

## FM RF & IF ALIGNMENT

### EQUIPMENT REQUIRED

1. FM Signal Generator
2. AC Voltmeter
3. Oscilloscope
4. DC Voltmeter (Input impedance: over 1MΩ/V)
5. Distortion Meter

**NOTE:**

- Signal output should be no higher than necessary to obtain an output reading.
- Maintain line voltages at 120 volts, 60 Hz AC (UL, C.S.A.)
  (240 volts, 50 Hz AC for Australian)
- Set SELECTOR Switch to FM.
- Refer to P.C.B. illustrations for test points/adjustments.

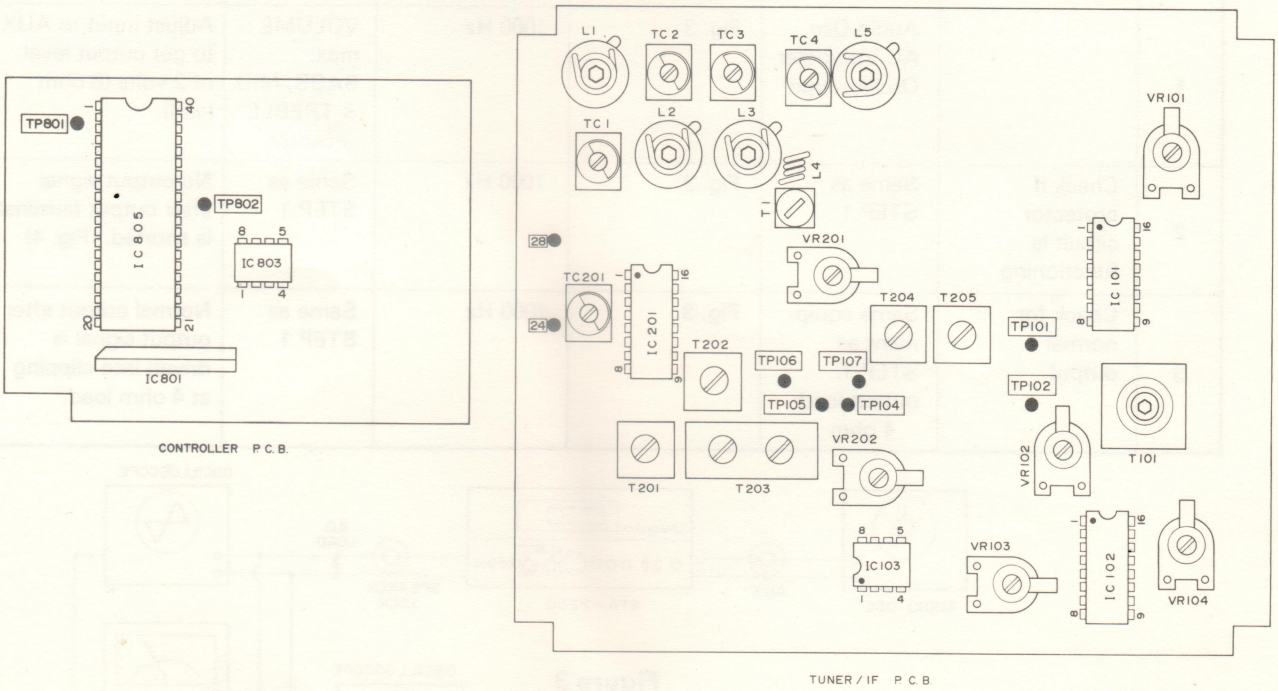


**Figure 6 COIL, TRIMMER & TEST POINT LOCATION**

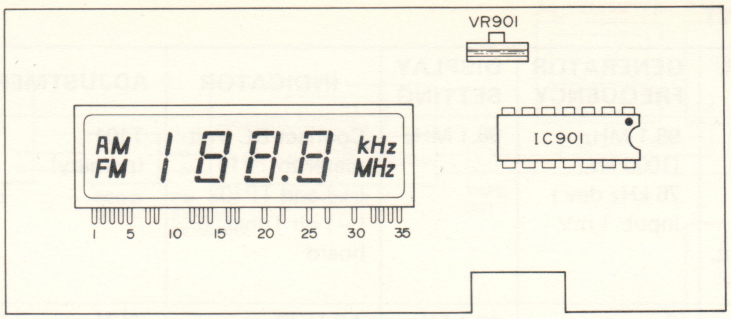


DISPLAY P.C.B.

## FM RF ADJUSTMENT

| STEP | GENERATOR COUPLING | GENERATOR FREQUENCY | DISPLAY SETTING | INDICATOR | ADJUSTMENT | REMARKS |
|---|---|---|---|---|---|---|
| 1 | Signal Generator to FM Ant. Terminal thru FM Dummy Ant.) (300 Ω) | 90.1 MHz (1000 Hz, 75 kHz dev.) Input: about 2-3 μV | 90.1 MHz | Connect DC Voltmeter to Pin 3 on Tuner, IF board | L5 (FM OSC Coil) | Adjust for 3.7 ± 0.1 V DC reading on DC Voltmeter. (Fig. 6, 7) |
| 2 | Same as above | Same as above | 90.1 MHz | AC Voltmeter and Scope to TAPE OUT 1 jack | L1 (Ant. Coil) L2 (RF 1 coil) L3 (RF 2 Coil) | Adjust for maximum reading on AC Voltmeter. (Fig. 6, 8) |
| 3 | Same as above | 106.1 MHz (1000 Hz, 75 kHz dev.) Input: about 2-3 μV | 106.1 MHz | Connect DC Voltmeter to Pin 3 on FM FRONT END board | TC4 (FM OSC trimmer) | Adjust for 17 ± 0.3 V DC reading on DC Voltmeter. (Fig. 6, 7) |
| 4 | Same as above | Same as above | 106.1 MHz | AC Voltmeter and Scope to TAPE OUT 1 jack | TC1 (Ant. trimmer) TC2 (RF 1 trimmer) TC3 (RF 2 trimmer) | Adjust for maximum reading on AC Voltmeter. (Fig. 6, 8) |
| 5 | Repeat STEPs 1 through 4 until no further improvement is noticed. | | | | | |
| 6 | Same as STEP 1 | 107.9 MHz (1000 Hz, 75 kHz dev.) Input: about 2-3 μV | 107.9 MHz | Same as STEP 1 | ------ | Check that DC voltage is under 22 V on DC Voltmeter. (Fig. 7) |

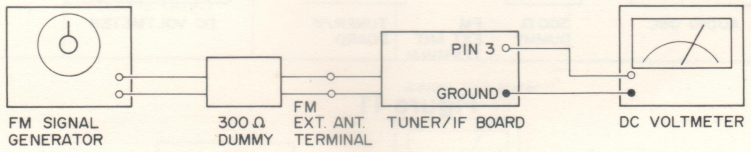


**Figure 7**

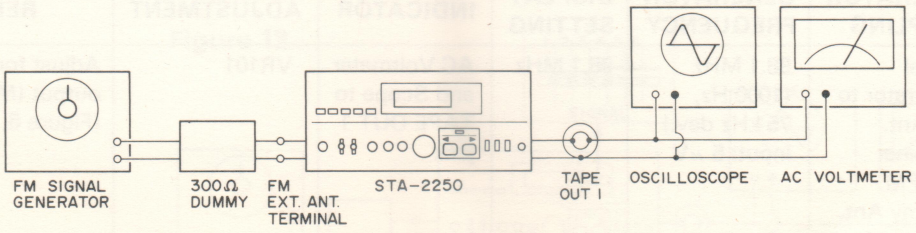


**Figure 8**

## FM IF ADJUSTMENT

| STEP | GENERATOR COUPLING | GENERATOR FREQUENCY | DISPLAY SETTING | INDICATOR | ADJUSTMENT | REMARKS |
|---|---|---|---|---|---|---|
| 1 | Signal Generator to FM Ant. Terminal thru FM Dummy Ant. (300 Ω) | 98.1 MHz (1000 Hz, 75 kHz dev.) Input: 1 mV | 98.1 MHz | Connect DC Voltmeter to TP101 (+) and TP102 (−) on Tuner, IF board | T101 (primary) | Adjust for DC voltage within 30 mV on DC Voltmeter. (Fig. 6, 9, 11) |
| 2 | Same as above | Same as above | 98.1 MHz | AC Voltmeter Distortion meter and Scope to TAPE OUT 1 jack | T101 (secondary) | Adjust for minimum distortion (about 0.1%). (Fig. 6, 8, 9, 10) |
| 3 | Same as above | 98.1 MHz (1000 Hz, 75 kHz, dev.) Input: about 2-3 μV | 98.1 MHz | Same as above | T1 (1st IFT) | Adjust for maximum reading on AC Voltmeter. (Fig. 6, 8) |
| 4 | Repeat STEPs 1 through 3 until no further improvement is noticed. | | | | | |

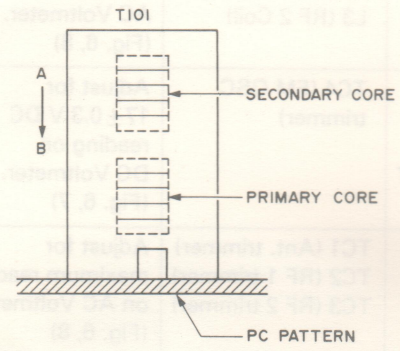


Figure 9

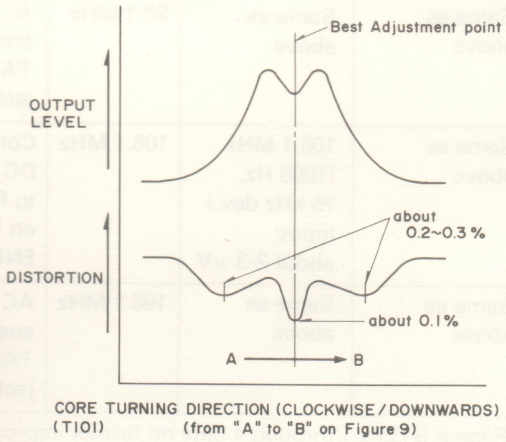


Figure 10

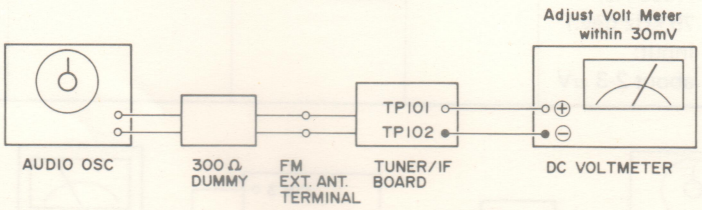


Figure 11

## FM MUTING

**NOTE:** Set SELECTOR Switch to FM MUTE.

| STEP | GENERATOR COUPLING | GENERATOR FREQUENCY | DISPLAY SETTING | INDICATOR | ADJUSTMENT | REMARKS |
|---|---|---|---|---|---|---|
| 1 | Signal Generator to FM Ant. Terminal thru FM dummy Ant. (300 ohm) | 98.1 MHz (1000 Hz, 75 kHz dev.) input: 5 μV | 98.1 MHz | AC Voltmeter and Scope to TAPE OUT 1 jack | VR101 | Adjust for no signal output (Muting is "on") (Figure 6, 12) |

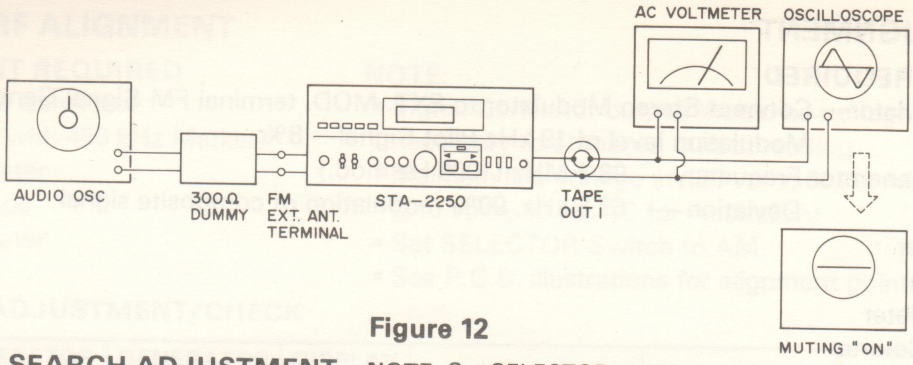


**Figure 12**

## FM AUTO SEARCH ADJUSTMENT

**NOTE:** Set SELECTOR to FM.

| STEP | GENERATOR COUPLING | GENERATOR FREQUENCY | DISPLAY SETTING | INDICATOR | ADJUSTMENT | REMARKS |
|---|---|---|---|---|---|---|
| 1 | Signal Geneator to AM Ant. Terminal thru FM Dummy Ant. (300 Ω) | 98.17 MHz (100 Hz, 75 kHz dev.) Input: 1 mV | 98.1 MHz | Connect DC Voltmeter to TP802 on Controller board | VR102 | Set the Generator Frequency to 98.17 MHz and adjust for DC voltage to 2-4 V on DC Voltmeter. (Fig. 6, 13) |
| 2 | Same as above | Near 98.03 MHz (1000 Hz, 75 kHz dev.) Input: 1 mV | 98.1 MHz | Same as above | ---- | Check the Generator Frequency: should be 98.03 MHz ± 10 kHz when the voltage of TP802 rises to 2-4 V. (Fig. 13) |
| 3 | Same as above | 98.1 MHz (1000 Hz, 75 kHz dev.) | 98.1 MHz | Auto Search and Display | ---- | Check that Auto Search stops when input level is 6 μV ±2 dB. |

## FM SIGNAL METER ADJUSTMENT

| STEP | GENERATOR COUPLING | GENERATOR FREQUENCY | DISPLAY SETTING | INDICATOR | ADJUSTMENT | REMARKS |
|---|---|---|---|---|---|---|
| 1 | Signal Generator to FM Ant. terminal thru FM Dummy Ant. (300 Ω) | 98.1 MHz (1000 Hz, 75 kHz dev.) Input: 5 μV | 98.1 MHz | Signal LED Meter | VR901 on display PCB | Adjust so up to the second LED on Receiver light. (Fig. 6, 14) |
| 2 | Same as above | 98.1 MHz (1000 Hz, 75 kHz dev.) | 98.1 MHz | Signal LED Meter | VR201 on Tuner PCB | Check that all LEDs light when input level is 3.16 mV ± 6 dB. (Fig. 6, 14) |

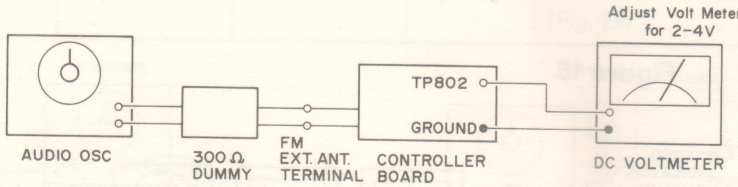


**Figure 13**

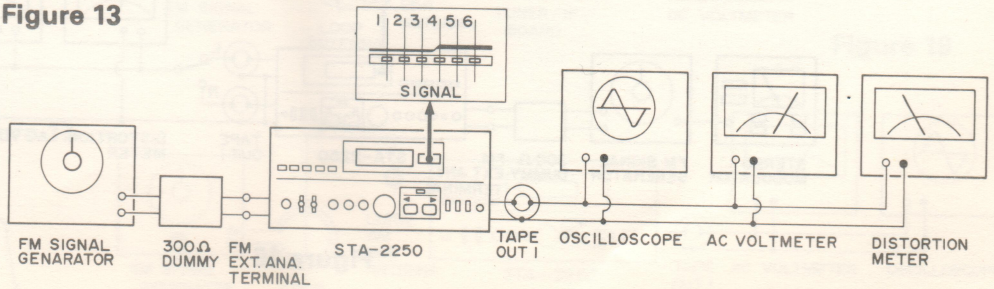


**Figure 14**

## FM MPX ALIGNMENT

### EQUIPMENT REQUIRED

1. Stereo Modulator--- Connect Stereo Modulator to EXT. MOD. terminal FM Signal Generator.
   Modulation level of 19 kHz Pilot Signal--- 8%
2. FM Signal Generator Frequency---- 98.1 MHz (1000 Hz mod.)
   Deviation---- 67.5 kHz, 90% modulation of composite signal
3. AC Voltmeter
4. Oscilloscope
5. Distortion Meter
6. Frequency Counter

**NOTE:**
- Set SELECTOR Switch to FM.
- Set Mode Switch to Stereo.
- See P.C.B. illustration for alignment/test points.

### MULTIPLEX & SEPARATION ADJUSTMENT

| STEP | SIGNAL GENERATOR COUPLING | STEREO MODULATION | INDICATOR | ADJUSTMENT | REMARKS |
|---|---|---|---|---|---|
| 1 | Connect FM Ant. terminal thru FM Dummy Ant. (300 Ω) | Mono, 1 kHz no mod. Input: 1 mV | Counter connected to TP103 on Tuner, IF board | VR104 | Adjust for 19 kHz ±50 Hz on Counter. (Fig. 15) |
| 2 | Same as above | Composite MPX signal 1 kHz | AC Voltmeter connected to TAPE OUT 1 jack. | ---- | With 5 μV input signal, STEREO display should come on. (Fig. 16) |
| 3 | Same as above | Composite MPX signal 1 kHz on left ch. ONLY | AC Voltmeter connected to TAPE OUT 1 jack of right ch. | VR103 (separation) | Adjust for minimum reading on meter. (Fig. 16) |
| 4 | Same as above | Composite MPX signal 1 kHz on right ch. ONLY | AC Voltmeter connected to TAPE OUT 1 jack to left ch. | Same as above | Adjust for minimum reading on meter. (Fig. 16) |

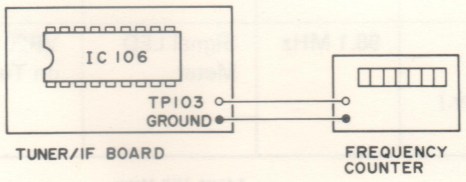


**Figure 15**

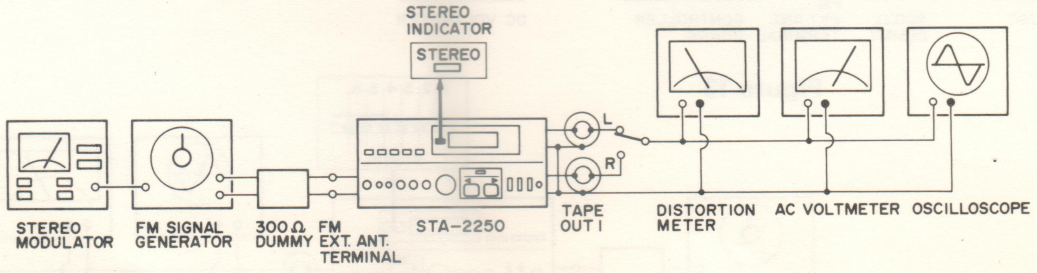


**Figure 16**

## AM IF & RF ALIGNMENT

### EQUIPMENT REQUIRED

1. AM Signal Generator
2. IF Scope (with 450 kHz Marker)
3. DC Voltmeter
4. Oscilloscope
5. AC Voltmeter

### NOTE:

- Signal Generator output should be no higher than necessary to obtain an output reading.
- Maintain line voltage at 120 volts, 60 Hz AC (UL, C.S.A.) (240 volts, 50 Hz AC for Australian)
- Set SELECTOR Switch to AM.
- See P.C.B. illustrations for alignment points/adjustments.

### AM RF/IF ADJUSTMENT/CHECK

| STEP | GENERATOR COUPLING | GENERATOR FREQUENCY | DISPLAY SETTING | INDICATOR | ADJUSTMENT | REMARKS |
|---|---|---|---|---|---|---|
| 1 | IF Scope to Pin 24 on Tuner, IF board | 450 kHz | 1610 kHz | IF Scope to TP106 via capacitor (0.01 $\mu$F) on Tuner, IF board (Fig. 17) | T203 T202 AM IFT | Adjust for maximum amplitude and balanced as shown in Figure 18. |
| 2 | Connect standard loop antenna to Signal Generator and radiate signal into the AM ferrite Ant. | 1610 kHz (400 Hz, 30% mod.) | 1610 kHz | DC Voltmeter to Pin 21 on Tuner, IF board. (Fig. 19) | T201 (AM OSC Coil) | Adjust for 19 V DC on DC Voltmeter. (Fig. 19) |
| 3 | Same as above | 600 kHz (400 Hz, 30% mod.) | 600 kHz | AC Voltmeter and Scope to TAPE OUT 1 jack (Fig. 20) | L1202 (AM Ant. Coil) | Adjust for maximum reading on AC Voltmeter (Fig. 20) |
| 4 | Same as above | 1400 kHz (400 Hz, 30% mod.) | 1400 kHz | Same as above | TC201 (AM Ant. Trimmer) | Adjust for maximum reading on AC Voltmeter. (Fig. 20) |
| 5 | Repeat STEPs 3 and 4 until no further improvement is noticed. | | | | | |
| 6 | Same as STEP 2 | 1000 kHz (400 Hz, 30% mod.) | 1000 kHz | Same as STEP 3 | ---- | Check for tracking error in 1000 kHz should be within 2 dB. |
| 7 | By 1000 kHz, if tracking error does not fall within 2 dB, repeat STEP 2 and adjust for less than 22 V DC (Fig. 19). Then repeat STEPs 3 through 6. | | | | | |
| 8 | Same as STEP 2 | 1000 kHz (400 Hz, 30% mod.) Input: 100mV/m | 1000 kHz | Signal LED Meter (Fig. 21) | VR201 | Adjust so the LED Meter (full scale) on Receiver lights. (Fig. 21) |
| 9 | Same as STEP 2 | Same as above | 1000 kHz | DC Voltmeter connected to Pin 28 on Tuner, IF board (Fig. 22) | VR201 | Check the voltage on Pin 28. Adjust for 175 mV on DC Voltmeter (Fig. 22) |

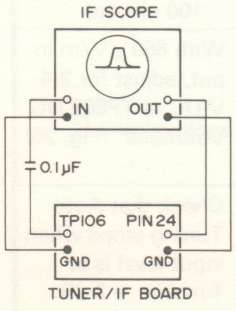


Figure 17

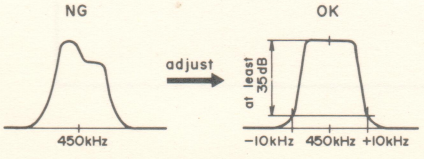


Figure 18

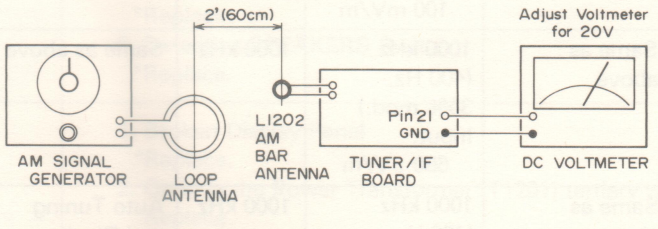


Figure 19

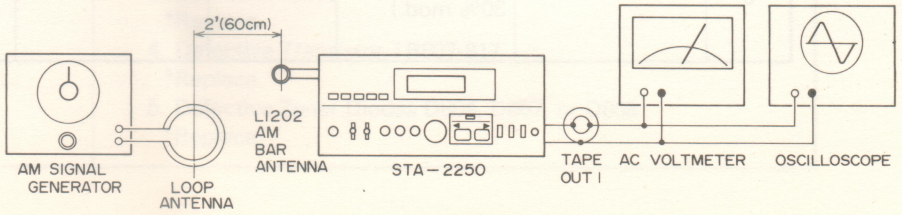


Figure 20

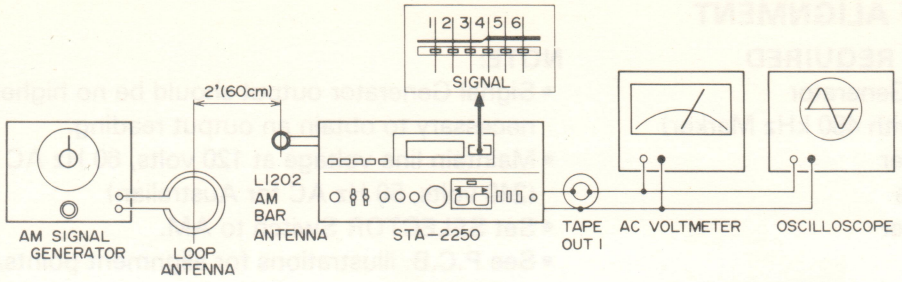


**Figure 21**

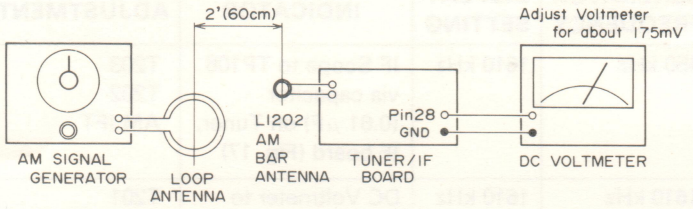


**Figure 22**

## AM AUTO SEARCH ADJUSTMENT

| STEP | GENERATOR COUPLING | GENERATOR FREQUENCY | DISPLAY SETTING | INDICATOR | ADJUSTMENT | REMARKS |
|---|---|---|---|---|---|---|
| 1 | IF Scope to TP104 on Tuner, IF board (Fig. 23) Break the path between TP104 and TP105. | 450 kHz Input: approx. 30 mV | 1000 kHz | IF Scope to TP107 via capacitor 0.01$\mu$F on Tuner, IF board. | T204 T205 | Adjust for maximum amplitude and proper linearity between $\pm$10 kHz markers. (Fig. 24) |
| 2 | Connect TP104 and TP105 on Tuner, IF board by soldering. | | | | | |
| 3 | Connect standard loop antenna to Signal Generator and radiate signal into the AM ferrite Ant. (Fig. 25) | 1000 kHz (400 Hz, 30% mod.) Input: 100 mV/m | 1000 kHz | DC Voltmeter connect to TP107 on Tuner, IF board. (Fig. 25) | ---- | Check that DC voltage at TP107: should be within $\pm$30 mV. (Fig. 25) If not within $\pm$30 mV, repeat STEP 1. |
| 4 | Same as above | 1000 kHz $\pm$2 kHz — 1000 kHz $\pm$4.5 kHz (400 Hz, 30% mod.) Input: 100 mV/m | 1000 kHz | DC Voltmeter connect to TP802 on Controller board. (Fig. 26) | ---- | With 995.5-998 kHz or 1002-1004.5 kHz range, check that DC voltage at TP802 is 2-4 V. (input level: 100 mV/m) |
| 5 | Same as above | 1000 kHz (400 Hz, 30% mod.) Input: 650 $\mu$V/m | 1000 kHz | Same as above | VR202 | With 650 $\mu$V/m input, adjust for 2-4 V DC at TP802 DC Voltmeter. (Fig. 26) |
| 6 | Same as above | 1000 kHz (400 Hz, 30% mod.) | 1000 kHz | Auto Tuning and Display | ---- | Check that Auto Tuning stops when input level is at 1 mV/m $\pm$2 dB. |

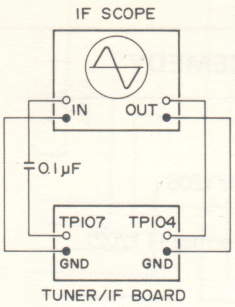


Figure 23

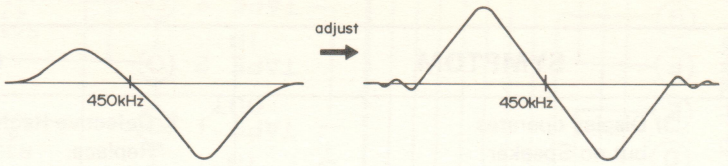


Figure 24

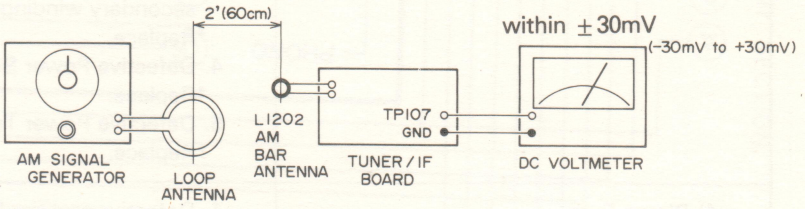


Figure 25

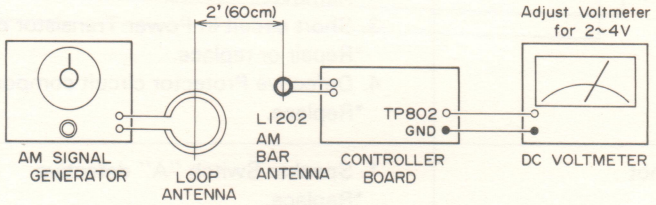


Figure 26

### MEMORY BACK UP CHECK

Unplug AC Cord and after 10 minutes replug AC Cord. Check that memorized frequencies are kept.

# (11) TROUBLESHOOTING

| SYMPTOM | CAUSE/REMEDY |
|---|---|
| 1) No output | 1. Faulty AC power cord<br>*Replace.<br>2. Defective POWER Switch.<br>*Replace.<br>3. Broken wire in the Power Transformer (T1202)<br>*Replace.<br>4. Blown Primary Fuse<br>*Replace.<br>5. Defective D1201 or Power Supply circuit component<br>*Replace.<br>6. Defective SPEAKERS Switch<br>*Replace. |
| 2) Display does not light. | 1. Broken Display Panel<br>*Replace.<br>2. Open in the Power Transformer (T1201) tertiary winding<br>*Replace.<br>3. Defective IC805<br>*Replace.<br>4. Defective Transistor TR807-817<br>*Replace.<br>5. Defective Zener Diodes D804, D807, or D808<br>*Replace. |

| SYMPTOM | CAUSE/REMEDY |
|---|---|
| 3) Display operates but no Speaker output. | 1. Defective Rectifier D1201<br>*Replace.<br>2. Defective Capacitors C1205/1206<br>*Replace.<br>3. Defect in the Power Transformer (T1202) secondary winding<br>*Replace.<br>4. Defective Power Supply circuit component<br>*Replace.<br>5. Defective Power Transistor TR517-520<br>*Replace. |
| 4) Blown Fuse | 1. Defective rectifier D1201<br>*Replace.<br>2. Short circuit in the rectifier circuit<br>*Remove.<br>3. Short circuit in Power Transistor circuitry TR517-520<br>*Repair or replace.<br>4. Defective Protector circuit component<br>*Replace. |
| 5) "A" Speakers do not work. | 1. Speaker Switch "A" defective<br>*Replace. |
| 6) "B" Speakers do not work. | 1. Speaker Switch "B" defective<br>*Replace. |
| 7) No output on one channel with VOLUME at max. and BALANCE at center when a test signal is applied to the terminal of non-operating channel of the BALANCE control VR403/404. | 1. Defective transistors of Tone and Main Amp circuit<br>*Replace.<br>2. Defective Tone and Main Amp circuit component<br>*Replace. |
| 8) No output when a test signal is applied to the input terminals except PHONO. | 1. Defective MONO-Stereo or TAPE switch<br>*Replace.<br>2. Defective Selector Switch<br>*Replace. |
| 9) No output when a test signal is applied to the PHONO input terminals. | 1. Defective TR301-308 on Pre Amp board<br>*Replace.<br>2. Defective Pre Amp circuit component<br>*Replace.<br>3. Defective MONO-Stereo or TAPE Switch<br>*Replace.<br>4. Defective Selector Switch<br>*Replace. |
| 10) DC not balanced within ±50 mV at output of L/R channel. | 1. Defective TR501, 503, 505 or TR502, 504, 506<br>*Replace.<br>2. Defective TR509, 511 or TR510, 512<br>*Replace. |
| 11) Speakers work normally but Headphones do not work. | 1. Defective R1101(L)/R1102(R)<br>*Replace.<br>2. Headphone plug does not mate with jack<br>*Replace. |
| 12) "AUX" input not operative. | 1. Poor contact in "AUX" input jack<br>*Repair or replace.<br>2. Poor contact in Selector switch<br>*Repair or replace. |

# (33) SCHEMATIC DIAGRAM (

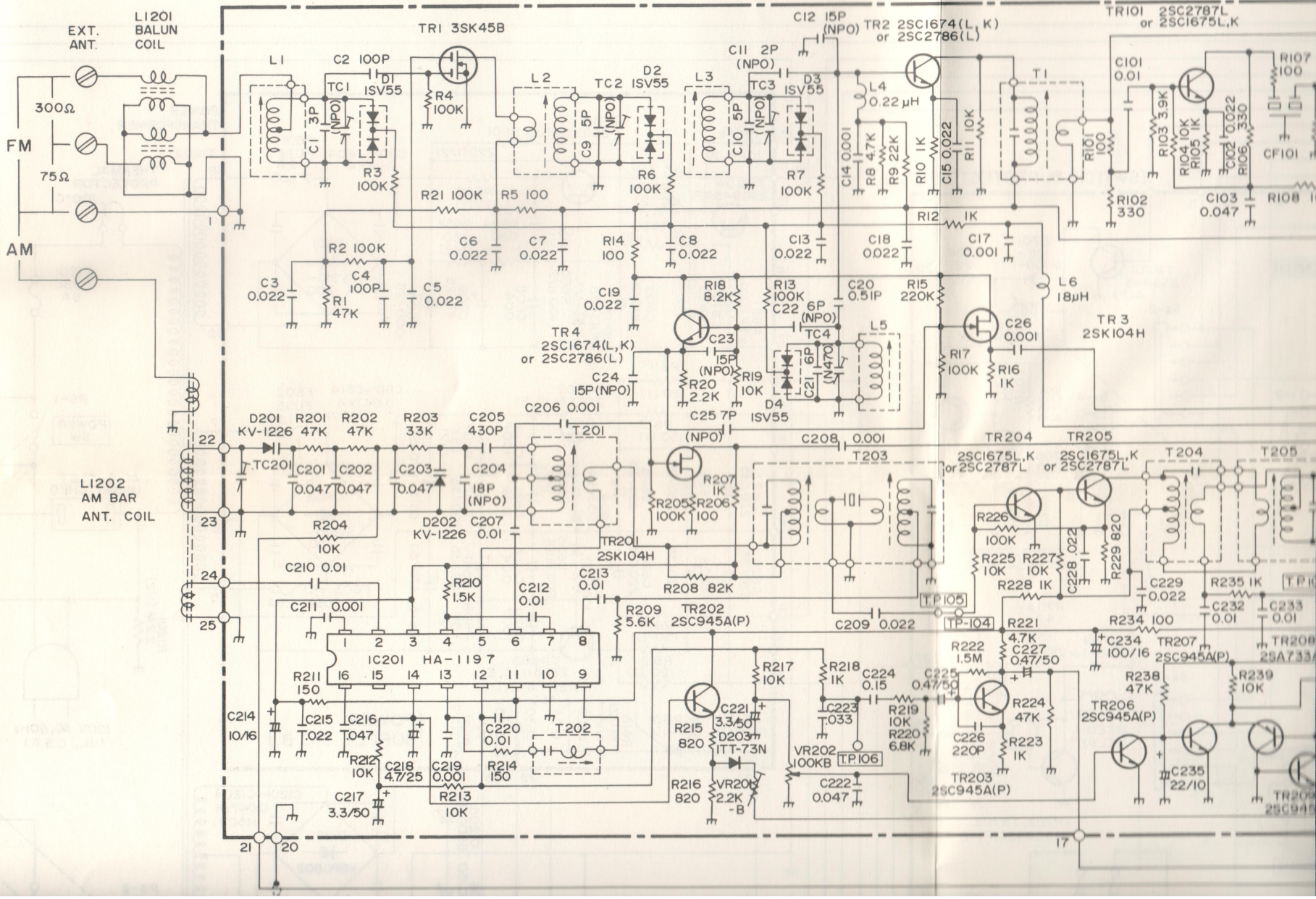

# M (TUNER & DISPLAY SECTION)

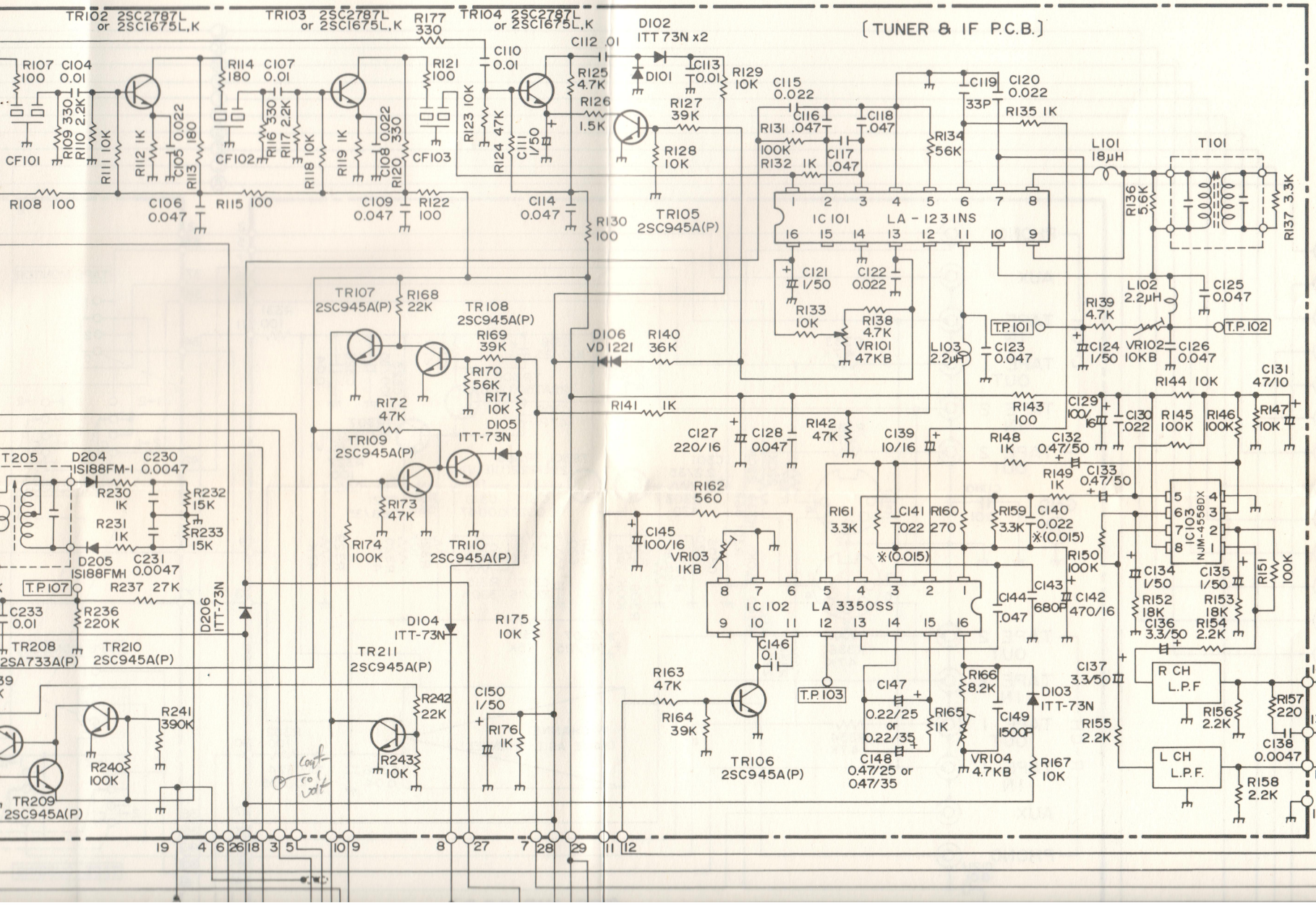

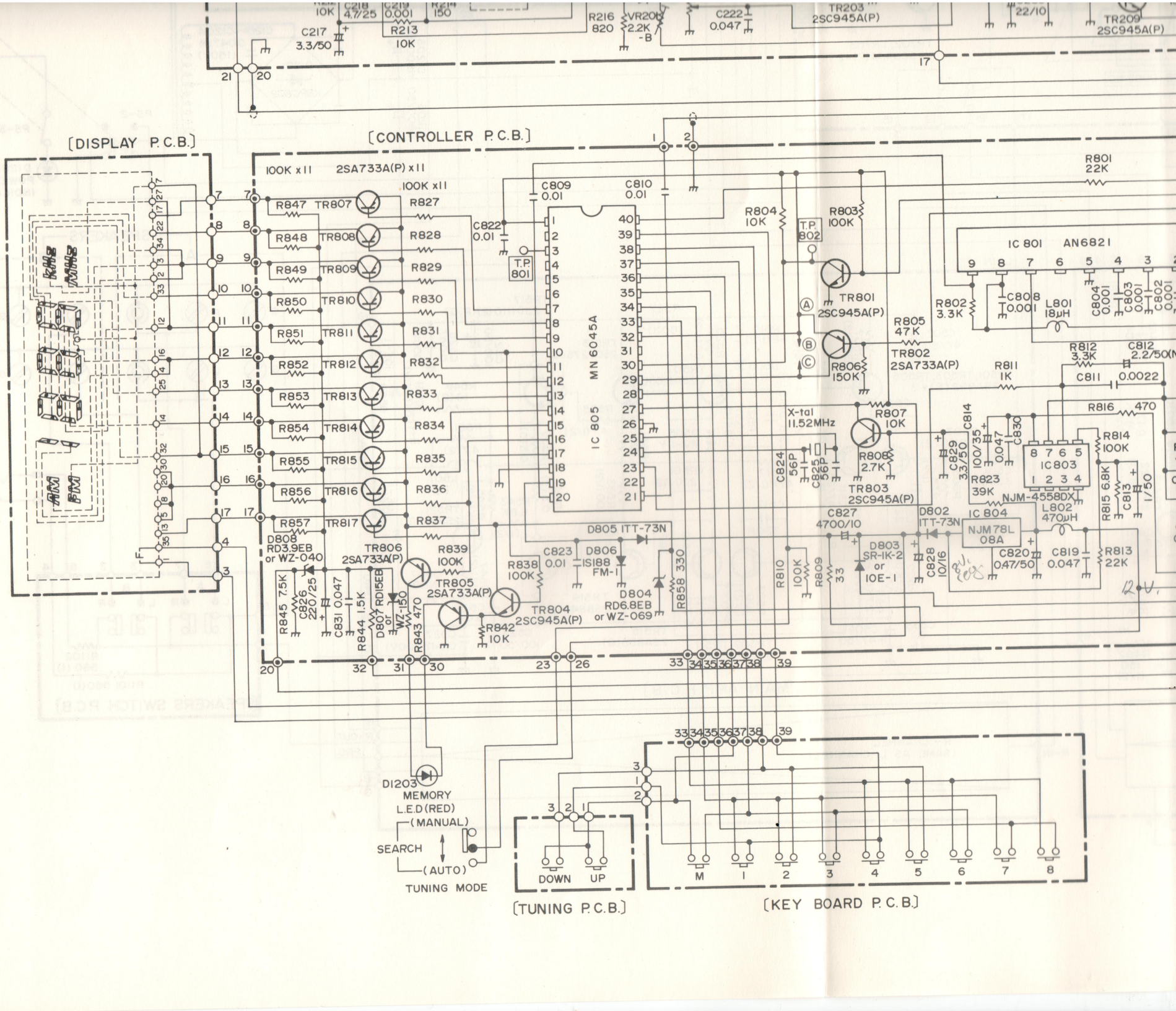
[DISPLAY P.C.B.]
[CONTROLLER P.C.B.]
[TUNING P.C.B.]
[KEY BOARD P.C.B.]
100K x11
2SA733A(P) x11
100K x11
IC 805 MN 6045A
IC 801 AN6821
IC 803
IC 804
NJM78L 08A
NJM-4558DX
X-tal 11.52MHz
TR801 2SC945A(P)
TR802 2SA733A(P)
TR803 2SC945A(P)
TR804 2SC945A(P)
TR805 2SA733A(P)
TR806 2SA733A(P)
D805 ITT-73N
D802 ITT-73N
D803 SR-1K-2 or 10E-1
D804 RD6.8EB or WZ-069
D808 RD3.9EB or WZ-040
DI203 MEMORY L.E.D(RED)
SEARCH
(MANUAL)
(AUTO)
TUNING MODE
DOWN
UP
M
1
2
3
4
5
6
7
8
12V.

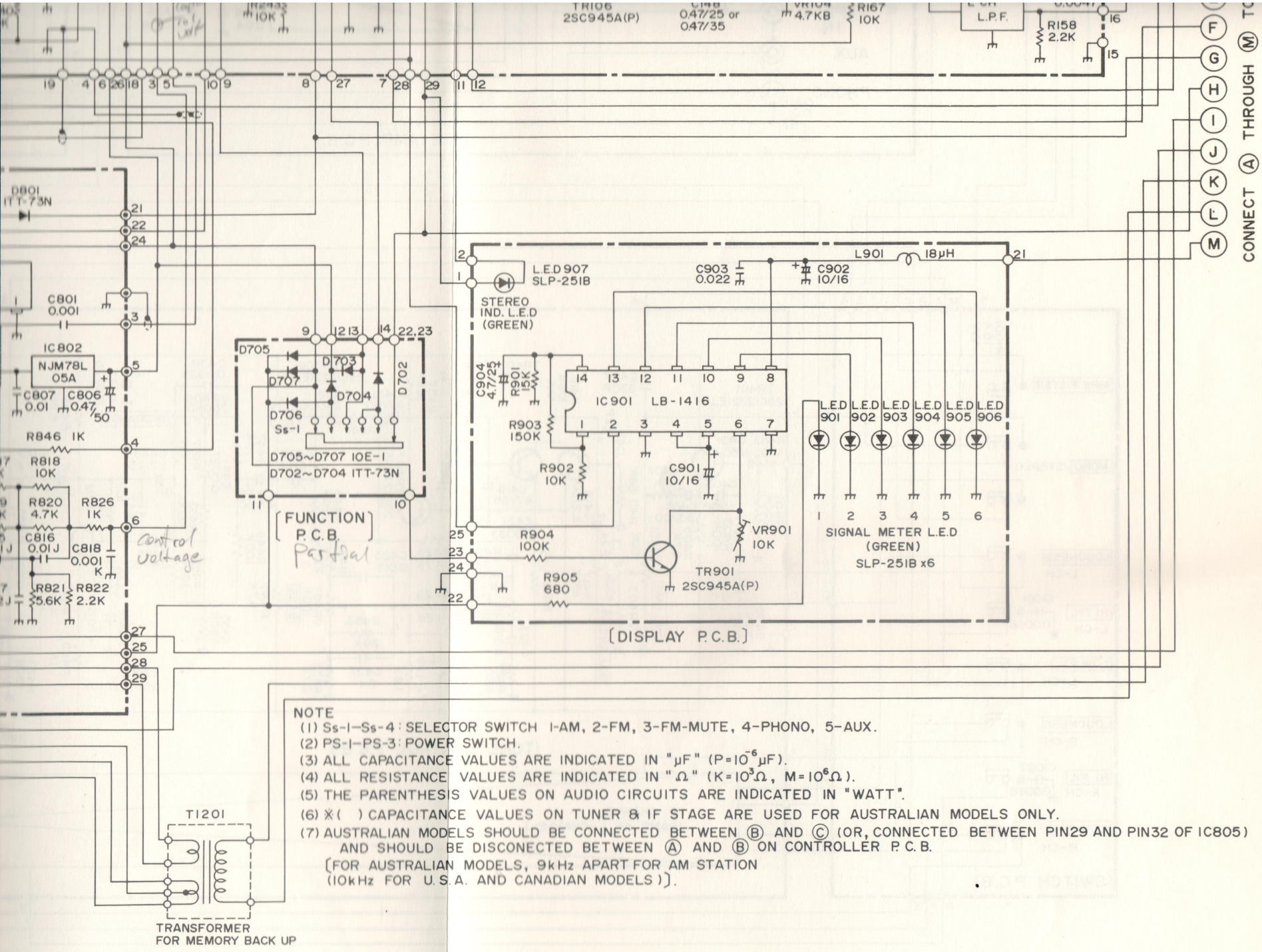


NOTE

(1) Ss-1–Ss-4 : SELECTOR SWITCH 1-AM, 2-FM, 3-FM-MUTE, 4-PHONO, 5-AUX.

(2) PS-1–PS-3 : POWER SWITCH.

(3) ALL CAPACITANCE VALUES ARE INDICATED IN "μF" ($P=10^{-6}\mu F$).

(4) ALL RESISTANCE VALUES ARE INDICATED IN "Ω" ($K=10^{3}\Omega$, $M=10^{6}\Omega$).

(5) THE PARENTHESIS VALUES ON AUDIO CIRCUITS ARE INDICATED IN "WATT".

(6) ※( ) CAPACITANCE VALUES ON TUNER & IF STAGE ARE USED FOR AUSTRALIAN MODELS ONLY.

(7) AUSTRALIAN MODELS SHOULD BE CONNECTED BETWEEN Ⓑ AND Ⓒ (OR, CONNECTED BETWEEN PIN29 AND PIN32 OF IC805) AND SHOULD BE DISCONECTED BETWEEN Ⓐ AND Ⓑ ON CONTROLLER P.C.B.
[FOR AUSTRALIAN MODELS, 9kHz APART FOR AM STATION
(10kHz FOR U.S.A. AND CANADIAN MODELS)].

# IO SECTION FOR UL & C.S.A. MODELS)

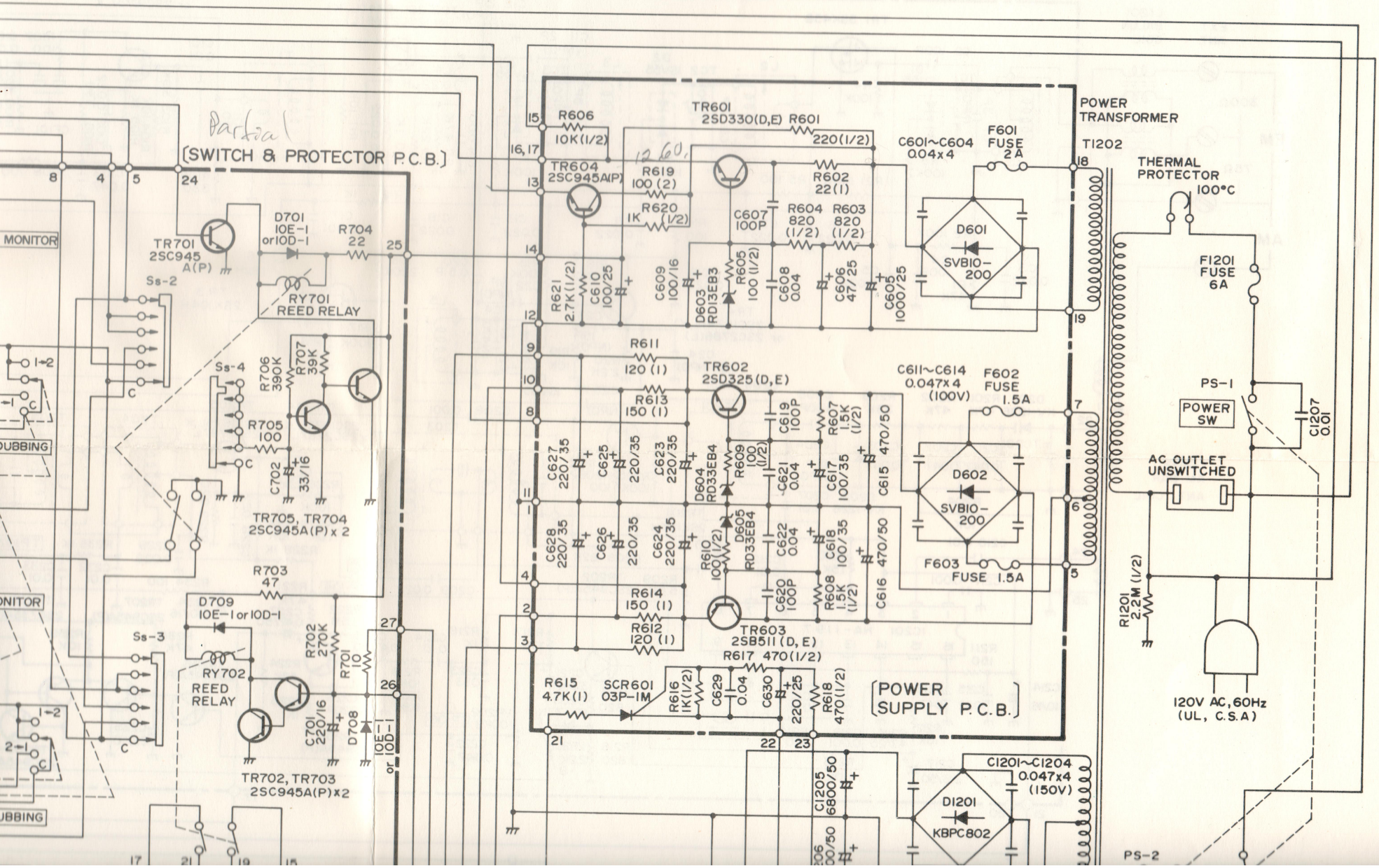

# (34) SCHEMATIC DIAGRA

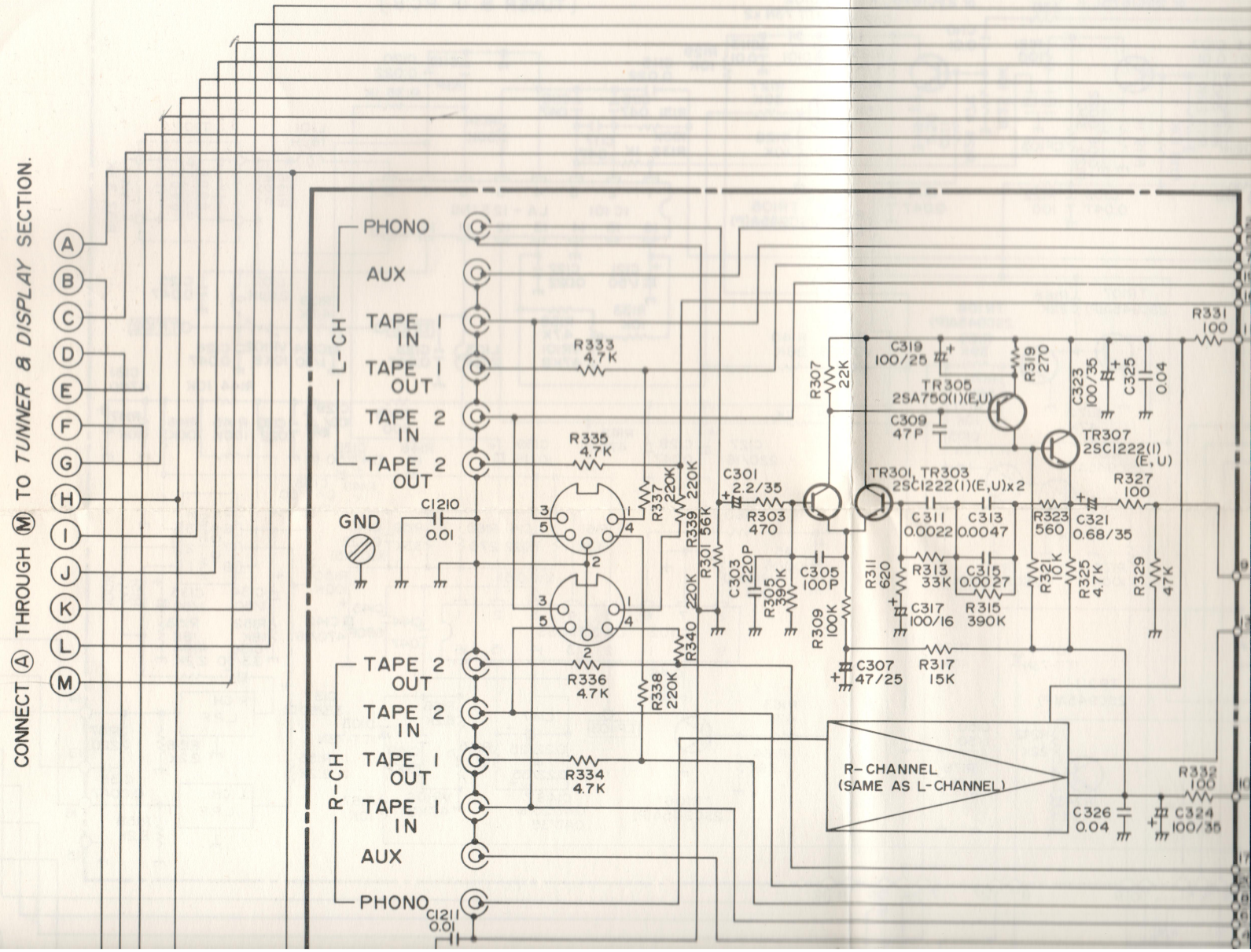

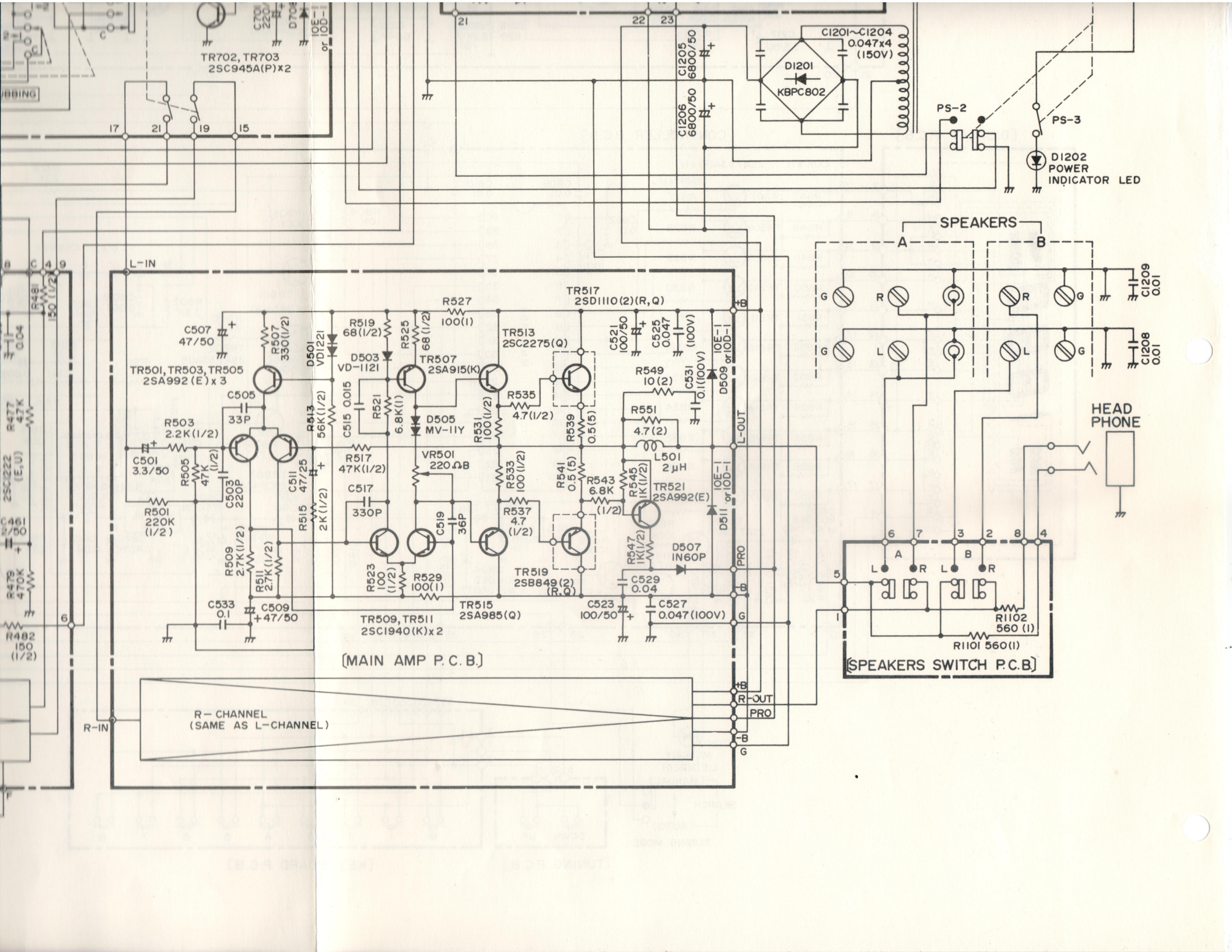
TR702, TR703
2SC945A(P)x2
C1201~C1204
0.047x4
(150V)
D1201
KBPC802
C1205
6800/50
C1206
6800/50
PS-2
PS-3
D1202
POWER
INDICATOR LED
SPEAKERS
A
B
HEAD
PHONE
L-IN
R-IN
TR501, TR503, TR505
2SA992(E)x3
TR507
2SA915(K)
TR513
2SC2275(Q)
TR517
2SD1110(2)(R,Q)
TR521
2SA992(E)
TR519
2SB849(2)
(R,Q)
TR509, TR511
2SC1940(K)x2
TR515
2SA985(Q)
D501
VD1221
D503
VD-1121
D505
MV-11Y
D507
1N60P
D509
D511
VR501
220ΩB
L501
2μH
L-OUT
R-OUT
PRO
+B
-B
G
(MAIN AMP P.C.B.)
R-CHANNEL
(SAME AS L-CHANNEL)
(SPEAKERS SWITCH P.C.B.)
R1102
560 (1)
R1101 560(1)

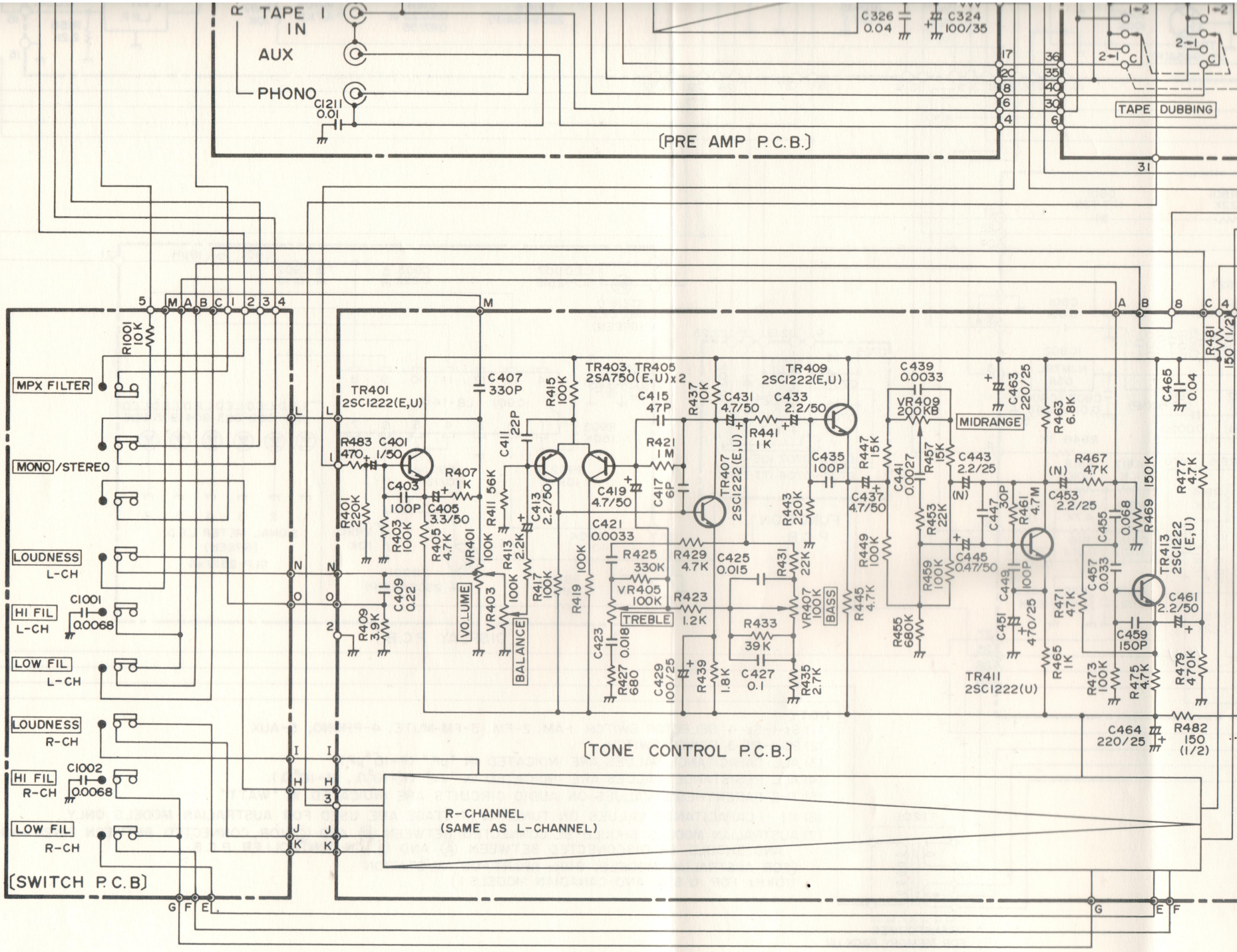
TAPE IN
AUX
PHONO
C1211 0.01
C326 0.04
C324 100/35
TAPE DUBBING
[PRE AMP P.C.B.]
MPX FILTER
MONO /STEREO
LOUDNESS L-CH
HI FIL L-CH
LOW FIL L-CH
LOUDNESS R-CH
HI FIL R-CH
LOW FIL R-CH
[SWITCH P.C.B]
R1001 10K
C1001 0.0068
C1002 0.0068
TR401 2SC1222(E,U)
TR403, TR405 2SA750(E,U)x2
TR407 2SC1222(E,U)
TR409 2SC1222(E,U)
TR411 2SC1222(U)
TR413 2SC1222 (E,U)
VOLUME
BALANCE
TREBLE
BASS
MIDRANGE
R-CHANNEL (SAME AS L-CHANNEL)
[TONE CONTROL P.C.B.]

| SYMPTOM | CAUSE/REMEDY |
|---|---|
| 13) "PHONO" input not operative. | 1. Poor contact in "PHONO" input jack<br>*Repair or replace.<br>2. Poor contact in Selector switch<br>*Repair or replace. |
| 14) No AM or FM | 1. Broken wire in the Power Transformer T1202<br>*Replace.<br>2. Defective D601<br>*Replace.<br>3. Defective TR601<br>*Replace.<br>4. Defective Zener Diode D603<br>*Replace.<br>5. Defective AM/FM Power supply circuit component<br>*Replace. |
| 15) No AM | 1. Poor contact in Selector switch<br>*Replace or repair.<br>2. Defective AM RF/IF circuit component<br>*Replace.<br>3. Defective Controller circuit component<br>*Replace. |
| 16) No FM | 1. Poor contact in Selector switch<br>*Replace.<br>2. Defective FM RF/IF circuit component<br>*Replace.<br>3. Defective Pre-Scaler circuit component<br>*Replace.<br>4. Defective Controller circuit component<br>*Replace. |
| 17) AUTO SEARCH does not operate (UP/DOWN) (AM or FM). | 1. Poor contact in SEARCH AUTO/MANUAL switch<br>*Repair or replace.<br>2. Defective TR801<br>*Replace.<br>3. Defective IC805<br>*Replace.<br>4. In FM mode, defective TR107 and/or 108<br>*Replace.<br>5. In AM mode, defective TR206-211<br>*Replace.<br>6. Poor contact in SEARCH UP/DOWN key switch<br>*Replace.<br>7. Readjust AUTO SEARCH Alignment. |
| 18) MANUAL TUNE does not operate (UP/DOWN) (AM or FM) | 1. Poor contact in SEARCH AUTO/MANUAL Switch<br>*Repair or replace.<br>2. Defective IC805<br>*Replace.<br>3. Poor contact in SEARCH UP/DOWN Key<br>*Replace. |
| 19) MEMORY Setting (keys 1—8) does not operate. | 1. Memory Setting LED defective<br>*Replace.<br>2. Poor contact in Memory Set key<br>*Repair or replace.<br>3. Poor contact in Memory keys 1-8<br>*Repair or replace.<br>4. Defective TR804, 805 or 806<br>*Replace.<br>5. Defective D804<br>*Replace. |

| SYMPTOM | CAUSE/REMEDY |
|---|---|
| 13) "PHONO" input not operative. | 1. Poor contact in "PHONO" input jack<br>*Repair or replace.<br>2. Poor contact in Selector switch<br>*Repair or replace. |
| 14) No AM or FM | 1. Broken wire in the Power Transformer T1202<br>*Replace.<br>2. Defective D601<br>*Replace.<br>3. Defective TR601<br>*Replace.<br>4. Defective Zener Diode D603<br>*Replace.<br>5. Defective AM/FM Power supply circuit component<br>*Replace. |
| 15) No AM | 1. Poor contact in Selector switch<br>*Replace or repair.<br>2. Defective AM RF/IF circuit component<br>*Replace.<br>3. Defective Controller circuit component<br>*Replace. |
| 16) No FM | 1. Poor contact in Selector switch<br>*Replace.<br>2. Defective FM RF/IF circuit component<br>*Replace.<br>3. Defective Pre-Scaler circuit component<br>*Replace.<br>4. Defective Controller circuit component<br>*Replace. |
| 17) AUTO SEARCH does not operate (UP/DOWN) (AM or FM). | 1. Poor contact in SEARCH AUTO/MANUAL switch<br>*Repair or replace.<br>2. Defective TR801<br>*Replace.<br>3. Defective IC805<br>*Replace.<br>4. In FM mode, defective TR107 and/or 108<br>*Replace.<br>5. In AM mode, defective TR206-211<br>*Replace.<br>6. Poor contact in SEARCH UP/DOWN key switch<br>*Replace.<br>7. Readjust AUTO SEARCH Alignment. |
| 18) MANUAL TUNE does not operate (UP/DOWN) (AM or FM) | 1. Poor contact in SEARCH AUTO/MANUAL Switch<br>*Repair or replace.<br>2. Defective IC805<br>*Replace.<br>3. Poor contact in SEARCH UP/DOWN Key<br>*Replace. |
| 19) MEMORY Setting (keys 1—8) does not operate. | 1. Memory Setting LED defective<br>*Replace.<br>2. Poor contact in Memory Set key<br>*Repair or replace.<br>3. Poor contact in Memory keys 1-8<br>*Repair or replace.<br>4. Defective TR804, 805 or 806<br>*Replace.<br>5. Defective D804<br>*Replace. |

| SYMPTOM | CAUSE/REMEDY |
|---|---|
| 35) "LOUDNESS" has no effect. | 1. Poor contact in LOUDNESS Switch<br>*Repair or replace.<br>2. Defective C409, 410 or R409, 410<br>*Replace. |
| 36) Protector circuit does not work. | 1. Defective SCR601<br>*Replace.<br>2. Defective TR521, 522<br>*Replace.<br>3. Defective D507, 508<br>*Replace.<br>4. Defective RY701<br>*Replace.<br>5. Defective TR701-705<br>*Replace.<br>6. Defective Protector circuit component<br>*Replace. |
| 37) STEREO Display or FM Stereo does not work. | 1. Readjust VR103/104.<br>2. Defective IC102<br>*Replace.<br>3. Defective TR106<br>*Replace.<br>4. MONO/Stereo switch defective<br>*Replace.<br>5. Defective LED907<br>*Replace. |
| 38) Memory frequency is not held with AC Cord unplugged. | 1. Defective R809, C827 or D803<br>*Replace. |

**NOTE:** If a short circuit takes place in the MPU circuit, unplug the AC Cord immediately. Wait a while and replug the AC Cord. The MPU should be normally operating again. If not, replace the MPU IC805.

## MICROPROCESSOR SYSTEM SECTION

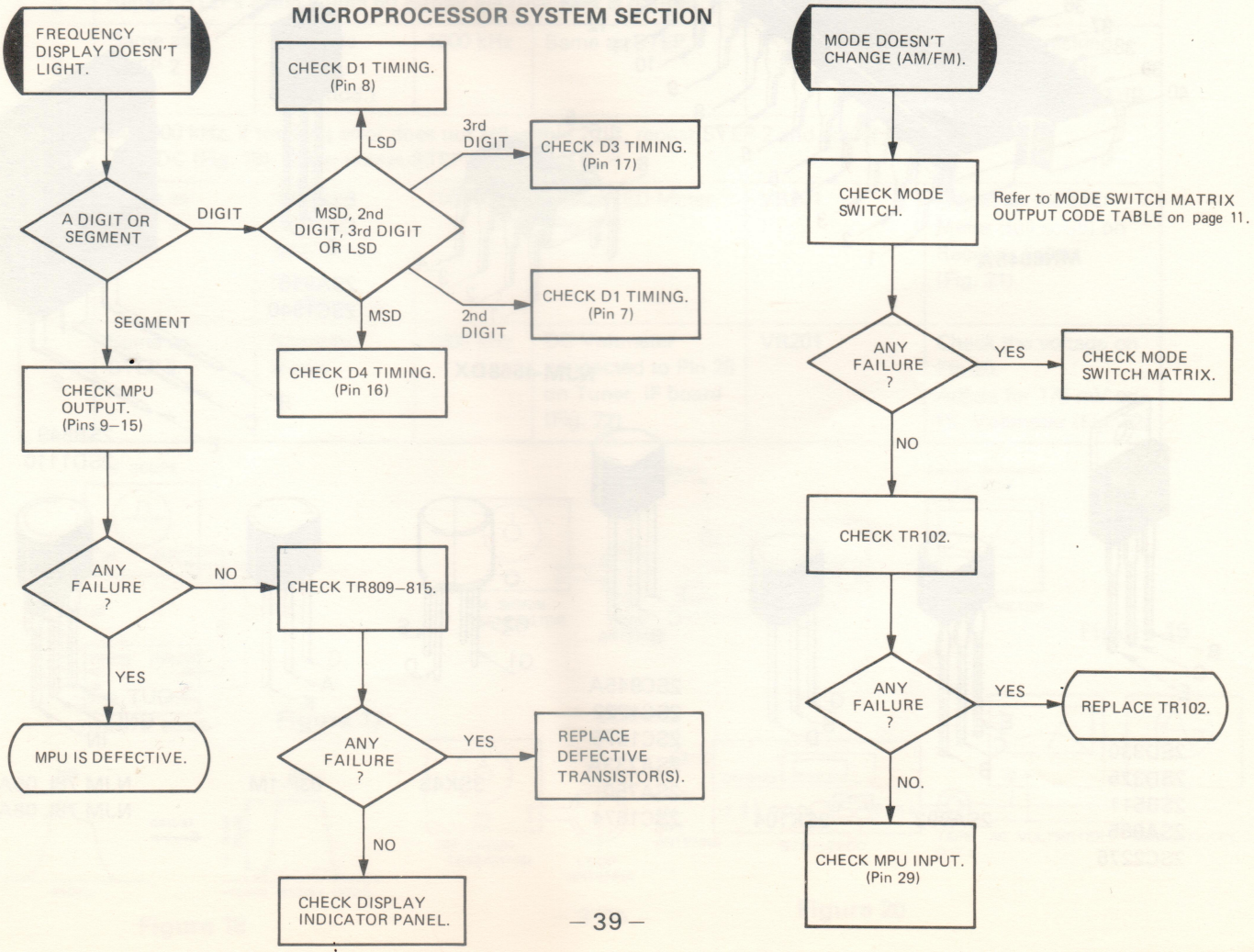

# (12) IC & TRANSISTOR LEAD IDENTIFICATION

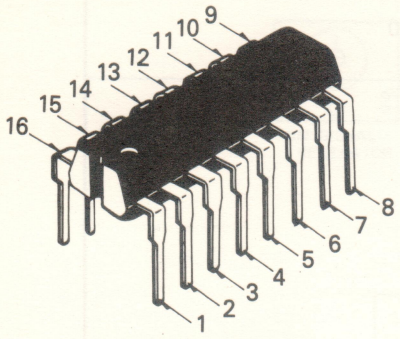


LA1231S

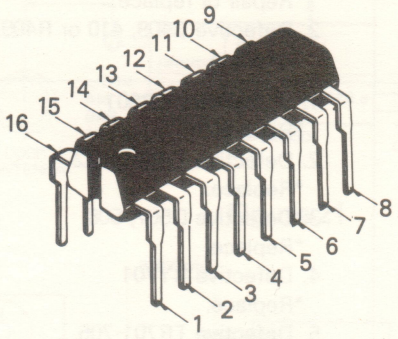


LA-3350S

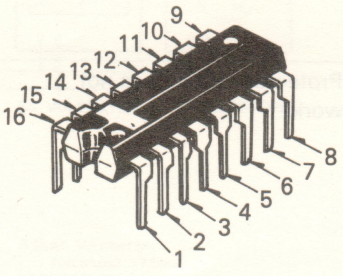


HA 1197

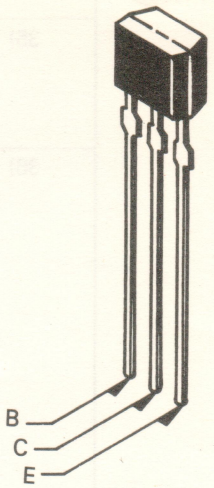


2SC 2786
2SC 2787

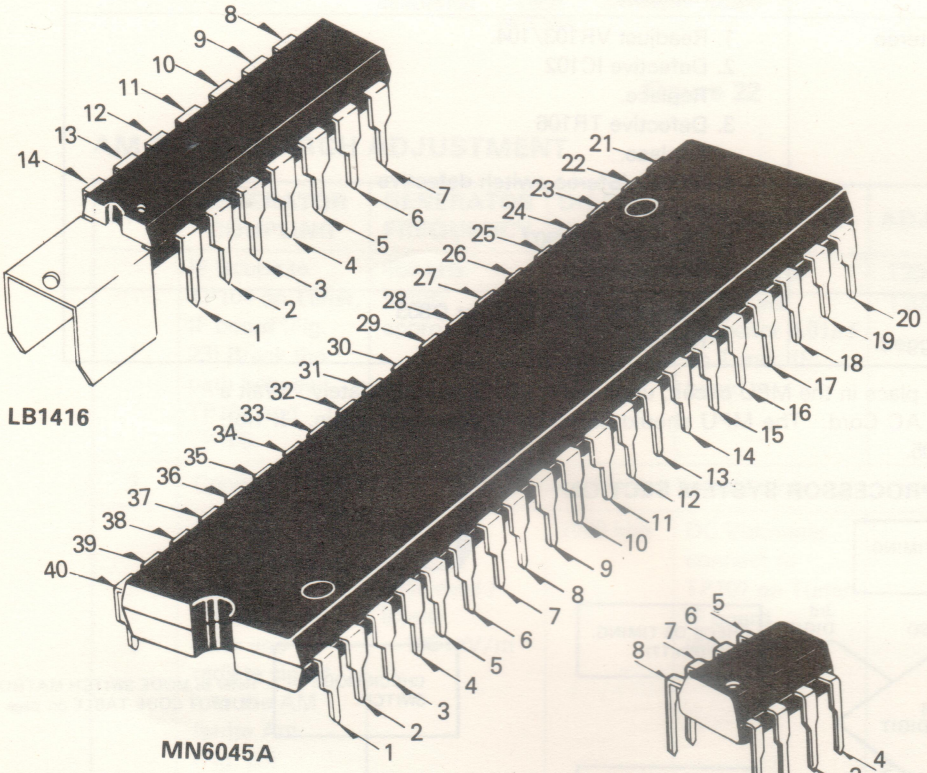


LB1416

MN6045A

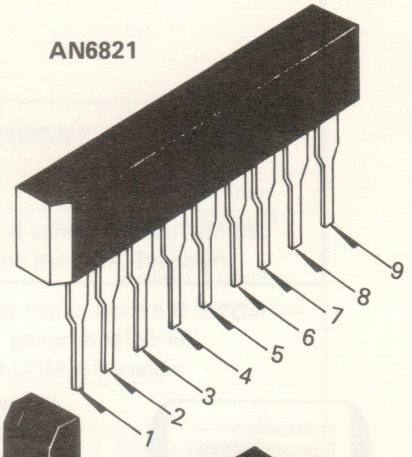


AN6821

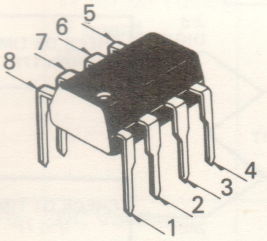


NJM-4558DX

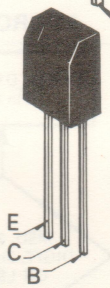


2SA915
2SC1940

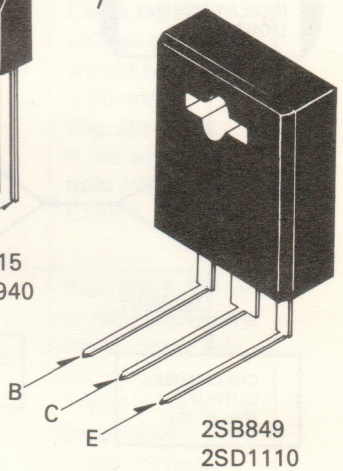


2SB849
2SD1110

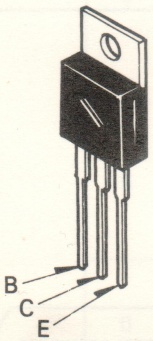


2SD330
2SD325
2SB511
2SA985
2SC2275

2SA992

2SK104

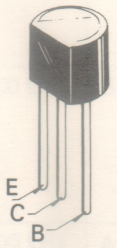


2SC945A
2SC1222
2SC1675
2SA733A
2SA750
2SC1674

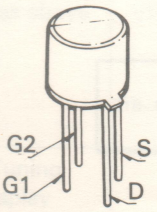


3SK45

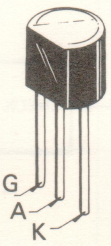


03P-1M

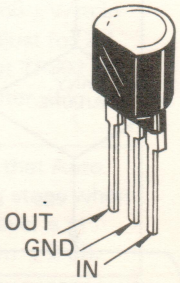


NJM 78L 05A
NJM 78L 08A

# (13) SEMICONDUCTOR VOLTAGE READINGS

| Ref. No. | | FM Mode | |
|---|---|---|---|
| | | NO SIGNAL (V DC) | 98.1 MHz, 1 mV INPUT (V DC) |
| TR1 | G1 | 0 | 0 |
| | G2 | 3.4 | 3.4 |
| | D | 10.7 | 10.6 |
| TR2 | B | 2.1 | 2.1 |
| | C | 12.3 | 12.2 |
| | E | 1.4 | 1.4 |
| TR3 | D | 11.5 | 11.4 |
| | S | 4.0 | 4.0 |
| | G | 3.6 | 3.6 |
| TR4 | B | 6.2 | 6.2 |
| | C | 11.6 | 11.6 |
| | E | 5.5 | 5.5 |
| TR101 | B | 3.1 | 3.1 |
| | C | 10.6 | 10.5 |
| | E | 2.4 | 2.4 |
| TR102 | B | 2.1 | 2.1 |
| | C | 11.5 | 11.4 |
| | E | 1.4 | 1.5 |
| TR103 | B | 2.2 | 2.2 |
| | C | 11.8 | 11.7 |
| | E | 1.5 | 1.6 |
| TR104 | B | 2.2 | 2.2 |
| | C | 8.4 | 8.1 |
| | E | 1.6 | 1.6 |
| TR105 | B | 0.6 | 0.6 |
| | C | 0.1 | 0.1 |
| | E | 0 | 0 |

| Ref. No. | | FM 98.1 MHz, 1 mV INPUT | |
|---|---|---|---|
| | | MONO (V DC) | STEREO (V DC) |
| TR106 | B | 0.6 | 0 |
| | C | 10 m | 2.1 |
| | E | 0 | 0 |

| Ref. No. | | FM mode | |
|---|---|---|---|
| | | NO SIGNAL (V DC) | 98.1 MHz, 1 mV INPUT (V DC) |
| TR107 | B | 35 m | 0.7 |
| | C | 0.6 | 0 |
| | E | 0 | 0 |
| TR108 | B | 0.6 | 1 m |
| | C | 35 m | 0.7 |
| | E | 0 | 0 |

| Ref. No. | | FM 98.1 MHz, 1 mV INPUT | |
|---|---|---|---|
| | | FM MUTE Switch "ON" (V DC) | FM MUTE Switch "off" (V DC) |
| TR109 | B | 0.6 | 0 |
| | C | 10 m | 0.6 |
| | E | 0 | 0 |
| TR110 | B | 10 m | 0.6 |
| | C | 0 | 0 |
| | E | 0 | 0 |

| Ref. No. | | AM Mode | |
|---|---|---|---|
| | | NO SIGNAL (V DC) | 100 kHz, 5 mV/m INPUT (V DC) |
| TR201 | D | 7.8 | 7.7 |
| | G | 0 | 0 |
| | S | 0.2 | 0.2 |

| Ref. No. | | AM Mode | |
|---|---|---|---|
| | | NO SIGNAL (V DC) | 1000 kHz, 5 mV/m INPUT (V DC) |
| TR202 | B | 1.5 | 2.2 |
| | C | 11.1 | 11.0 |
| | E | 0.9 | 1.5 |
| TR203 | B | 1.6 | 1.6 |
| | C | 6.5 | 6.5 |
| | E | 1.0 | 1.0 |
| TR204 | B | 0.7 | 0.7 |
| | C | 2.0 | 1.9 |
| | E | 0 | 0 |
| TR205 | B | 2.0 | 1.9 |
| | C | 8.9 | 8.8 |
| | E | 1.3 | 1.3 |
| TR206 | B | 0.4 | 0.6 |
| | C | 0.7 | 0.1 |
| | E | 0 | 0 |
| TR207 | B | 0.7 | 0.1 |
| | C | 20 m | 9.1 |
| | E | 0 | 0 |
| TR208 | B | 3 m | 7.4 |
| | C | 0 | 0 |
| | E | 20 m | 9.1 |
| TR209 | B | 0 | 0 |
| | C | 3 m | 7.3 |
| | E | 0 | −0.3 |

| Ref. No. | | AM Mode | |
|---|---|---|---|
| | | NO SIGNAL (V DC) | 1000 kHz, 5 mV/m INPUT (V DC) |
| TR210 | B | −7 m | −0.3 |
| | C | 2 | 7.4 |
| | E | 0 | 0 |
| TR211 | B | 6 m | 0.7 |
| | C | 0.6 | 0.5 |
| | E | 0 | 0 |

| Ref. No. | | NO INPUT (V DC) | 50 W (1 kHz) OUTPUT, 8 ohm (V DC) |
|---|---|---|---|
| TR301/ /302 | B | −0.1 | −0.1 |
| | C | 26.9 | 26.4 |
| | E | −0.6 | −0.6 |
| TR303/ 304 | B | −0.1 | −0.1 |
| | C | 28.2 | 27.8 |
| | E | −0.6 | −0.6 |
| TR305/ 306 | B | 26.9 | 26.4 |
| | C | 0.6 | 0.6 |
| | E | 27.2 | 26.9 |
| TR307 308 | B | 0.6 | 0.6 |
| | C | 28.2 | 27.8 |
| | E | 0.1 | 0.1 |
| TR401/ 402 | B | −0.5 | −0.5 |
| | C | 21.3 | 21.0 |
| | E | −1.1 | −1.1 |
| TR403 404 | B | 10 m | 10 m |
| | C | −16.9 | −16.7 |
| | E | 0.6 | 0.6 |
| TR405/ 406 | B | 25 m | 25 m |
| | | −5.1 | −5.1 |
| | E | 0.5 | 0.5 |

| Ref. No. | | NO INPUT (V DC) | 50 W (1 kHz) OUTPUT 8 ohm (V DC) |
|---|---|---|---|
| TR407/ 408 | B | −16.9 | −16.7 |
| | C | −0.3 | −0.3 |
| | E | −17.5 | −17.3 |
| TR409/ 410 | B | −1.1 | −1.1 |
| | C | 21.3 | 21.0 |
| | E | −1.7 | −1.7 |
| TR411 412 | B | −16.9 | −16.7 |
| | C | −0.9 | −0.8 |
| | E | −18.1 | −17.9 |
| TR413/ 414 | B | −0.4 | −0.4 |
| | C | 21.3 | 21.0 |
| | E | −1 | −1 |
| TR501/ 502 | B | 42.1 | 37.6 |
| | C | 0.6 | 0.6 |
| | E | 42.7 | 38.1 |
| TR503/ 504 | B | 0.1 | 0.1 |
| | C | −40.8 | −36.3 |
| | E | 0.6 | 0.6 |
| TR505/ 506 | B | 0.1 | 0.1 |
| | C | −40.8 | −36.3 |
| | E | 0.6 | 0.6 |
| TR507/ 508 | B | 42.1 | 37.4 |
| | C | 1.1 | 1.0 |
| | E | 42.6 | 38.1 |
| TR509 510 | B | −40.8 | −36.3 |
| | C | −14.3 | −16.6 |
| | E | −1 | −1 |
| TR511/ 512 | B | −41.0 | −36.3 |
| | C | −1 | −1 |
| | E | −41.6 | −36.8 |
| Ref. No. | | NO INPUT (V DC) | 50 W (1 kHz) OUTPUT, 8 ohm (V DC) |
| TR513/ 514 | B | 1.1 | 1.0 |
| | C | 45.7 | 41.1 |
| | E | 0.6 | 0.6 |
| TR519/ 520 | B | −1 | −1 |
| | C | −45.7 | −41.1 |
| | E | −0.6 | −0.6 |
| TR601 | B | 13.6 | 13.6 |
| | C | 18.2 | 16.8 |
| | E | 13.1 | 13.1 |
| TR602 | B | 33.0 | 33.0 |
| | C | 36.4 | 35.7 |
| | E | 32.4 | 32.4 |
| TR603 | B | −33.0 | −33.0 |
| | C | −36.4 | −35.7 |
| | E | −32.4 | −32.4 |
| TR604 | B | 13.6 | 12.9 |
| | C | 17.6 | 16.8 |
| | E | 12.9 | 12.3 |
| POWER SUPPLY P.C.B. | Pin 15 | 18 | 18 |
| | Pin 16, 17 | 13.1 | 13.1 |
| | Pin 13 | 12.9 | 12.3 |
| | Pin 14 | 14.6 | 13.9 |
| | Pin 9 | 29.9 | 29.6 |
| | Pin 10 | 26.7 | 26.4 |
| | Pin 8 | 32.4 | 32.4 |
| | Pin 4 | −32.4 | −32.4 |
| | Pin 2 | −26.7 | −26.4 |
| | Pin 3 | −29.9 | −29.6 |

| Ref. No. | | MUTING RELAY OFF (V DC) | MUTING RELAY ON (V DC) |
|---|---|---|---|
| TR701 | B | 0.4 | 0.7 |
| | C | 14.9 | 0.1 |
| | E | 0 | 0 |
| TR704 | B | 0.6 | 10 m |
| | C | 0.3 | 0.7 |
| | E | 0 | 0 |
| TR705 | B | 0.3 | 0.7 |
| | C | 15 | 0.1 |
| | E | 0 | 0 |
| Ref. No. | | PROTECTOR RELAY ON (V DC) | PROTECTOR RELAY OFF (V DC) |
| TR702 | B | 1.3 | −0.7 |
| | C | 0.7 | 19 |
| | E | 0.7 | 1 m |
| TR703 | B | 0.7 | 1 m |
| | C | 0.7 | 19 |
| | E | 0 | 0 |
| Ref. No. | | FM Mode | |
| | | NO SIGNAL (V DC) | 98.1 MHz, 1 mV INPUT (V DC) |
| TR801 | B | 0.6 | 0 |
| | C | 35 m | 6.5 |
| | E | 0 | 0 |
| Ref. No. | | AM NO SIGNAL | FM NO SIGNAL |
| TR802 | B | 10.1 | 6.6 |
| | C | 0 | 7.2 |
| | E | 7.2 | 7.2 |
| TR803 | B | 0.6 | 0.6 |
| | C | 30 m | 30 m |
| | E | 0 | 0 |
| Ref. No. | | MEMORY IND. LED OFF (V DC) | MEMORY IND. LED ON (V DC) |
| TR804 | B | 3.3 | 2.1 |
| | C | 6.8 | 6.8 |
| | E | 3.0 | 1.9 |
| TR805 | B | 13.0 | 1.9 |
| | C | 0 | 0 |
| | E | 1.6 | 10.8 |
| TR806 | B | 7.0 | 6.9 |
| | C | 2.5 | 2.4 |
| | E | 6.8 | 6.8 |
| Ref. No. | | FM 98.1 MHz, 1 mV INPUT (V DC) | |
| TR807 | B | 7.0 | |
| | C | −11.3 | |
| | E | 6.8 | |
| TR808 /816 /TR817 | B | 7.0 | |
| | C | −11.3 | |
| | E | 6.8 | |
| TR809 /TR812 /TR814 | B | 6.8 | |
| | C | −7.3 | |
| | E | 6.8 | |
| TR810 /TR811 /TR813 /TR815 | B | 6.6 | |
| | C | −3.3 | |
| | E | 6.8 | |
| Ref. No. | | AM Mode | FM Mode |
| TR901 | B | 0.6 | 0.2 |
| | C | 0 | 0.7 |
| | E | 0 | 0 |

| Ref. No. | | FM Mode | |
|---|---|---|---|
| | | NO SIGNAL (V DC) | 98.1 MHz, 1 mV INPUT (V DC) |
| IC101 | 1 | 3.0 | 3.0 |
| | 2 | 3.0 | 3.0 |
| | 3 | 3.0 | 3.0 |
| | 4 | 0 | 0 |
| | 5 | 0 | 0 |
| | 6 | 5.9 | 5.9 |
| | 7 | 5.7 | 5.8 |
| | 8 | 5.7 | 5.7 |
| | 9 | 5.7 | 5.7 |
| | 10 | 5.7 | 5.7 |
| | 11 | 13.1 | 13.1 |
| | 12 | 3.8 | 1.7 |
| | 13 | 3.3 | 5.7 |
| | 14 | 0 | 0 |
| | 15 | — | — |
| | 16 | 0.6 | 0.8 |

| Ref. No. | | FM 98.1 MHz, 1 mV INPUT | |
|---|---|---|---|
| | | MONO (V DC) | STEREO (V DC) |
| IC102 | 1 | 9.3 | 8.9 |
| | 2 | 2.9 | 2.9 |
| | 3 | 5.5 | 5.5 |
| | 4 | 6.7 | 6.3 |
| | 5 | 6.6 | 6.2 |
| | 6 | 11.6 | 0.9 |
| | 7 | 0 | 0 |
| | 8 | 0.3 | 0.3 |
| | 9 | — | — |
| | 10 | 2.1 | 2.2 |
| | 11 | 2.1 | 2.1 |
| | 12 | — | — |
| | 13 | 2.1 | 2.1 |
| | 14 | 2.1 | 2.1 |
| | 15 | 2.1 | 2.1 |
| | 16 | 2.8 | 2.8 |

| Ref. No. | | FM MODE | |
|---|---|---|---|
| | | NO SIGNAL (V DC) | 98.1 MHz, 1 mV INPUT (V DC) |
| IC103 | 1 | 6.3 | 6.2 |
| | 2 | 6.3 | 6.2 |
| | 3 | 6.2 | 6.2 |
| | 4 | 0 | 0 |
| | 5 | 6.2 | 6.2 |
| | 6 | 6.3 | 6.3 |
| | 7 | 6.3 | 6.2 |
| | 8 | 12.6 | 12.6 |

| Ref. No. | | AM Mode | |
|---|---|---|---|
| | | NO SIGNAL (V DC) | 1000 kHz, 5 mV/m INPUT (V DC) |
| IC201 | 1 | 5.0 | 5.0 |
| | 2 | 2.2 | 2.2 |
| | 3 | 9.9 | 9.8 |
| | 4 | 7.1 | 7.1 |
| | 5 | 9.9 | 9.8 |
| | 6 | 3.7 | 3.6 |
| | 7 | 1.3 | 1.3 |
| | 8 | 2.9 | 2.9 |
| | 9 | 8.0 | 7.6 |
| | 10 | 0 | 0 |
| | 11 | 11.2 | 11.1 |
| | 12 | 2.3 | 1.5 |
| | 13 | 0.7 | 0.7 |
| | 14 | 2.1 | 1.5 |
| | 15 | — | — |
| | 16 | 1.0 | 1.0 |

| Ref. No. | | FM Mode | |
|---|---|---|---|
| | | NO SIGNAL (V DC) | 98.1 MHz, 1 mV INPUT (V DC) |
| IC801 | 1 | 0 | 0 |
| | 2 | 3.8 | 3.8 |
| | 3 | 1.9 | 1.9 |
| | 4 | 1.9 | 1.9 |
| | 5 | 0 | 0 |
| | 6 | — | — |
| | 7 | 1.9 | 1.3 |
| | 8 | 4.9 | 4.9 |
| | 9 | 0.6 | 0.6 |

| Ref. No. | | FM Mode | |
|---|---|---|---|
| | | NO SIGNAL (V DC) | 98.1 MHz 1 mV INPUT (V DC) |
| IC802 | IN | 12.3 | 12.3 |
| | GND | 0 | 0 |
| | OUT | 4.9 | 4.9 |
| IC803 | 1 | — | — |
| | 2 | — | — |
| | 3 | — | — |
| | 4 | 0 | 0 |
| | 5 | 1.9 | 1.9 |
| | 6 | 1.9 | 1.9 |
| | 7 | 8.0 | 8.0 |
| | 8 | 31.7 | 31.7 |
| IC804 | IN | 12.4 | 12.3 |
| | GND | 0 | 0 |
| | OUT | 8.0 | 8.0 |
| IC805 | 1 | 7.2 | 7.2 |
| | 2 | — | — |
| | 3 | 4.2 | 4.2 |
| | 4 | — | — |
| | 5 | — | — |
| | 6 | — | — |
| | 7 | 6.0 | 6.0 |
| | 8 | 6.0 | 6.0 |
| | 9 | 4.7 | 4.7 |
| | 10 | 3.4 | 3.4 |
| | 11 | 3.5 | 3.5 |
| | 12 | 4.7 | 4.7 |
| | 13 | 3.4 | 3.4 |
| | 14 | 4.7 | 4.7 |
| | 15 | 3.4 | 3.4 |
| | 16 | 6.0 | 6.0 |
| | 17 | 6.0 | 6.0 |
| | 18 | 0 | 0 |
| | 19 | 0.1 | 0.1 |
| | 20 | 3.5 | 3.5 |
| | 21 | 3.4 | 3.4 |
| | 22 | — | — |
| | 23 | 1.9 | 1.9 |
| | 24 | 3.5 | 3.5 |
| | 25 | 3.6 | 3.6 |
| | 26 | 0 | 0 |
| | 27 | 30 m | 30 m |
| | 28 | 7.3 (AUTO)<br>0 (MANUAL) | 7.3 (AUTO)<br>0 (MANUAL) |
| | 29 | 7.3 | 7.3 |
| | 30 | 30 m | 6.6 |
| | 31 | — | — |
| | 32 | 7.2 | 7.2 |
| | 33 | 7.2 | 7.2 |
| | 34 | 7.2 | 7.2 |
| | 35 | 7.2 | 7.2 |
| | 36 | 0 | 0 |
| | 37 | 0 | 0 |
| | 38 | 0 | 0 |
| | 39 | 0 | 0 |
| | 40 | 0 | 0 |
| | | 7.0 (MUTE ON) | 7.0 (MUTE ON) |

| Ref. No. | | FM Mode | |
|---|---|---|---|
| | | NO SIGNAL (V DC) | 98.1 MHz, 1 mV INPUT (V DC) |
| IC901 | 1 | 0.1 | 0.1 |
| | 2 | 0.1 | 0.1 |
| | 3 | 0 | 0 |
| | 4 | 2.7 | 2.7 |
| | 5 | 2.7 | 2.7 |
| | 6 | 0.7 | 0.7 |
| | 7 | 0 | 0 |
| | 8 | 13.4 | 10.6 |
| | 9 | 30 m | 2.1 |
| | 10 | 30 m | 2.1 |
| | 11 | 20 m | 2.1 |
| | 12 | 20 m | 2.0 |
| | 13 | 30 m | 30 m |
| | 14 | 0.9 | 2.1 |

# (14) IC INTERNAL DIAGRAM

**NJM4558**

SCHEMATIC DIAGRAM

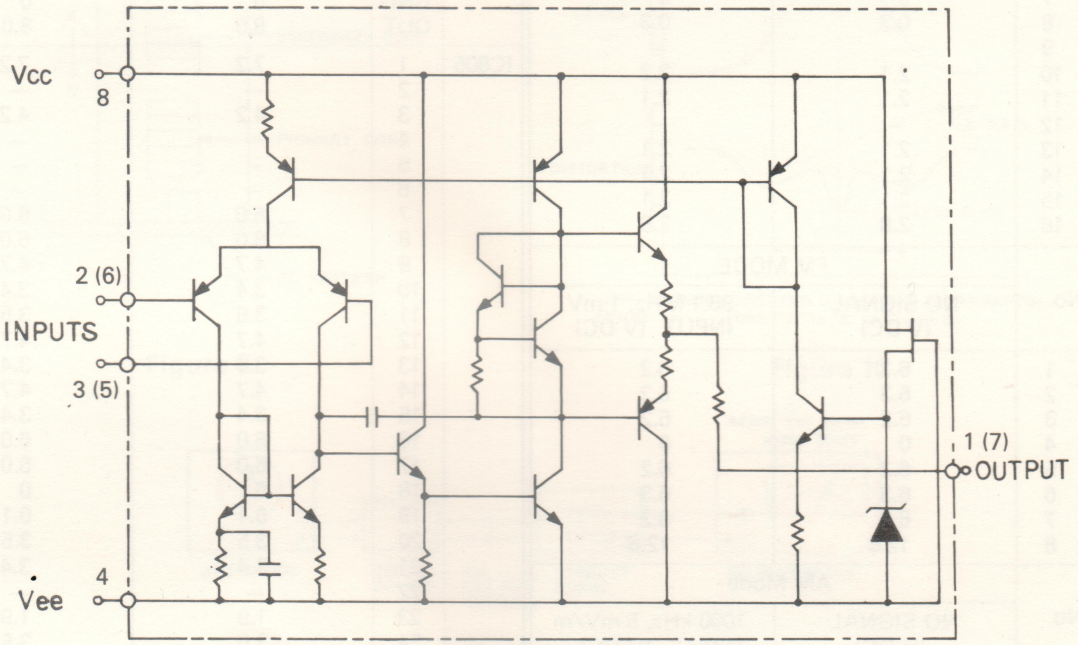


BLOCK DIAGRAM

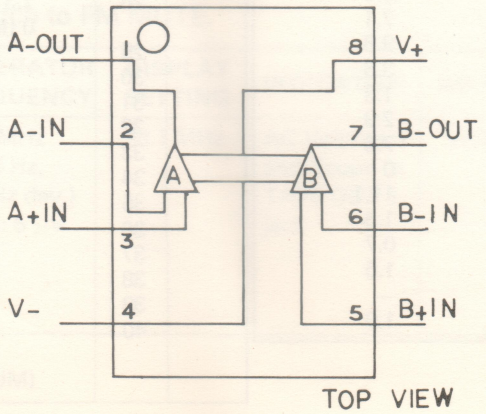

## LA3350SS

# SCHEMATIC DIAGRAM

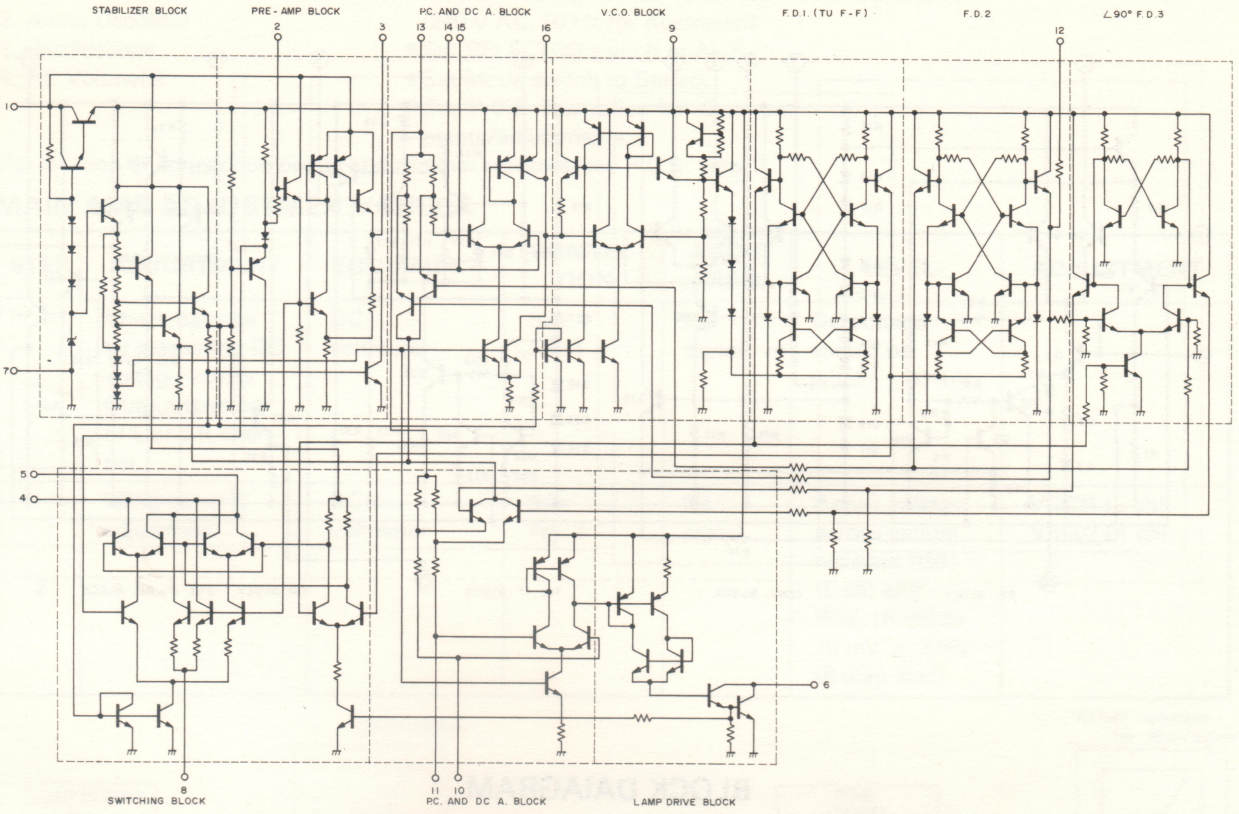


# BLOCK DIAGRAM

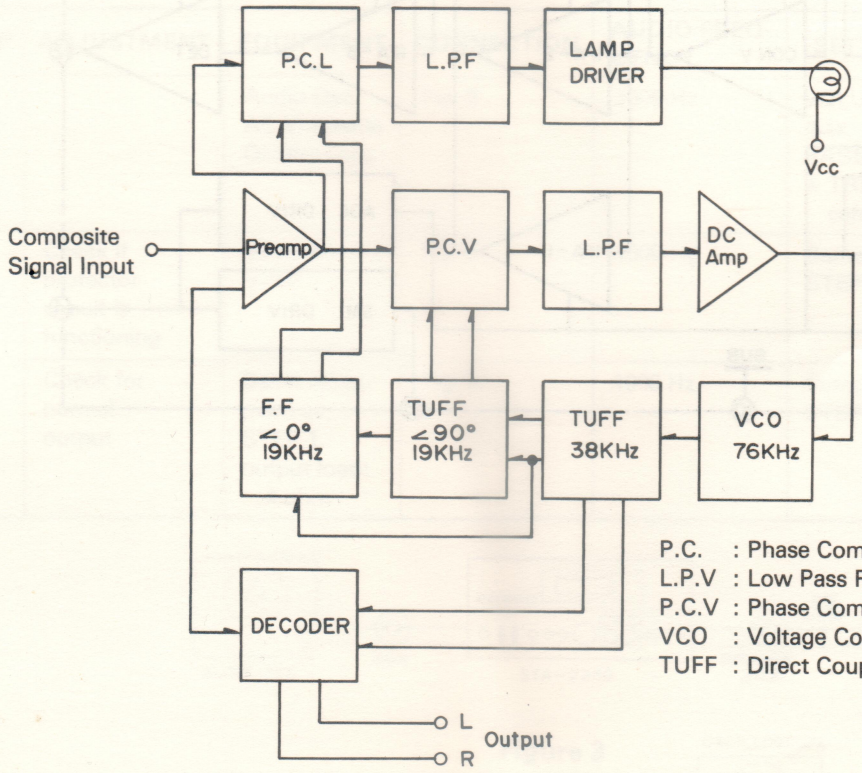


P.C. : Phase Comparator for Lamp
L.P.V : Low Pass Filter
P.C.V : Phase Comparator for VCO
VCO : Voltage Controlled Oscillator
TUFF : Direct Coupled Type Flip-flop,

## SCHEMATIC DIAGRAM

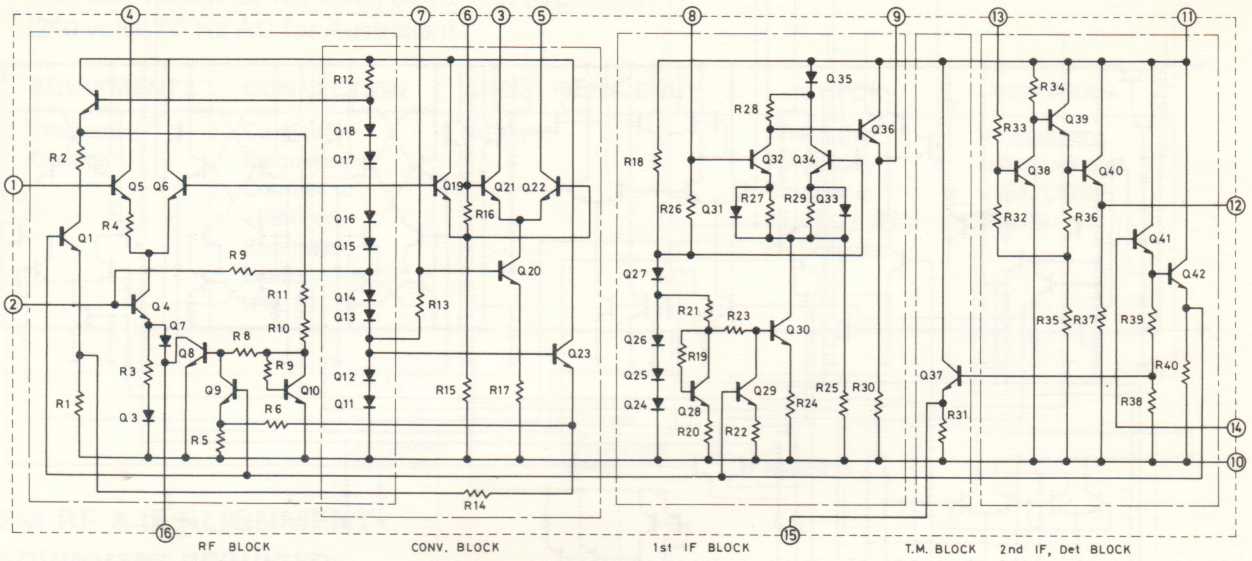


## BLOCK DAIAGRAM

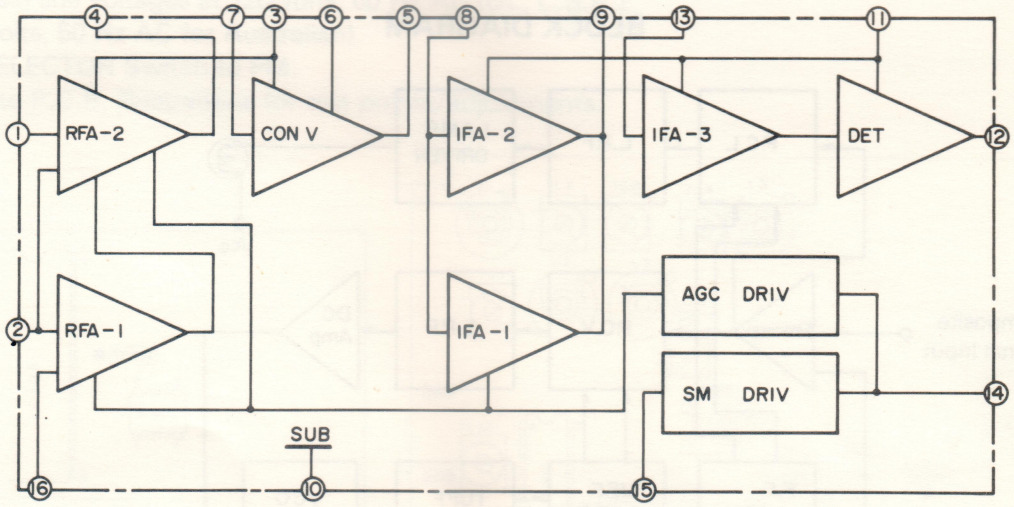

## LA1231

### SCHEMATIC DIAGRAM

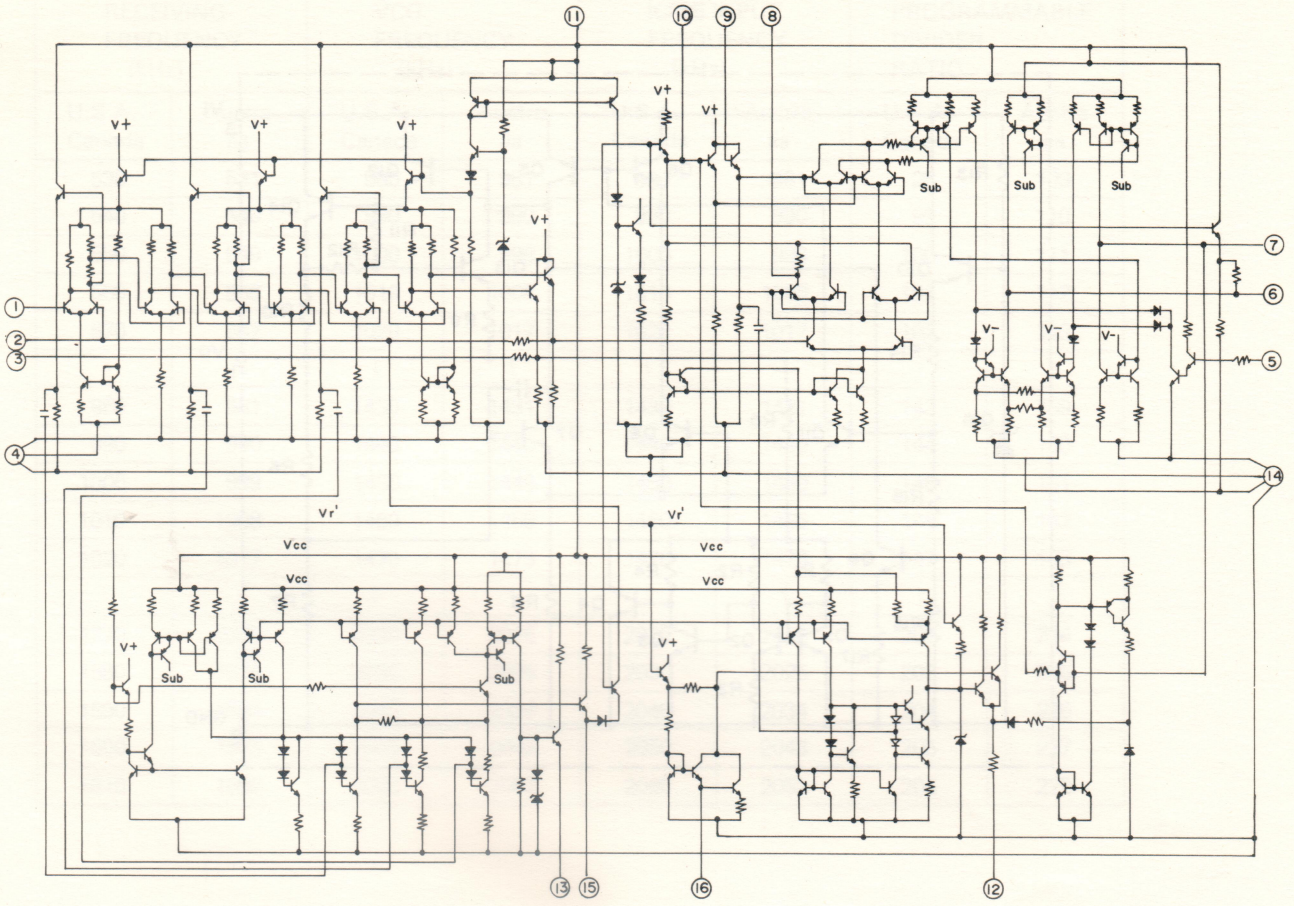


## LB1416

### SCHEMATIC DIAGRAM

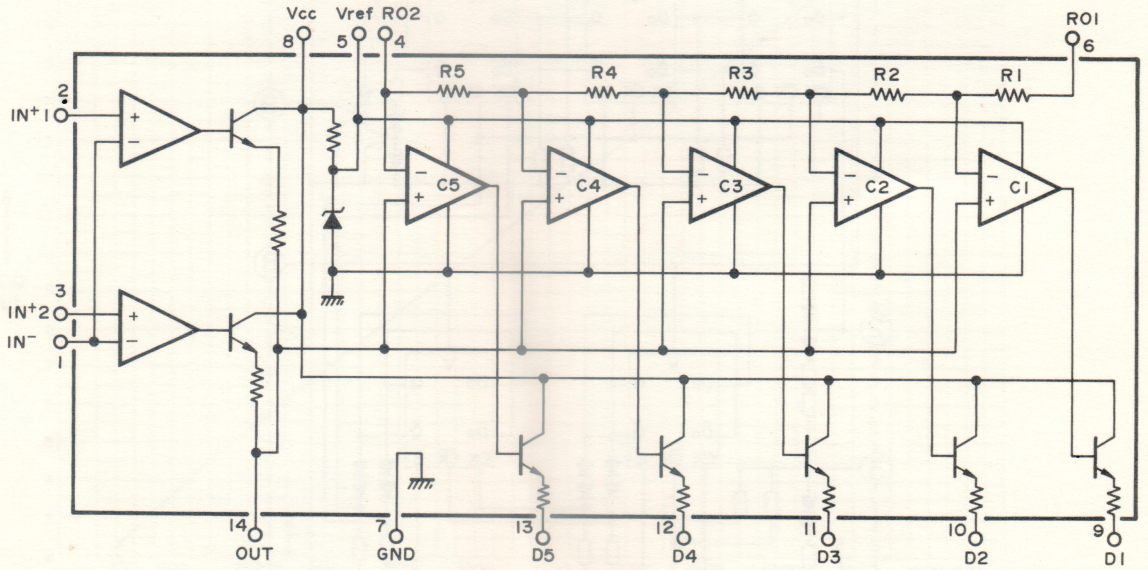

**NJM78L05A**
**NJM78L08A**

## SCHEMATIC DIAGRAM

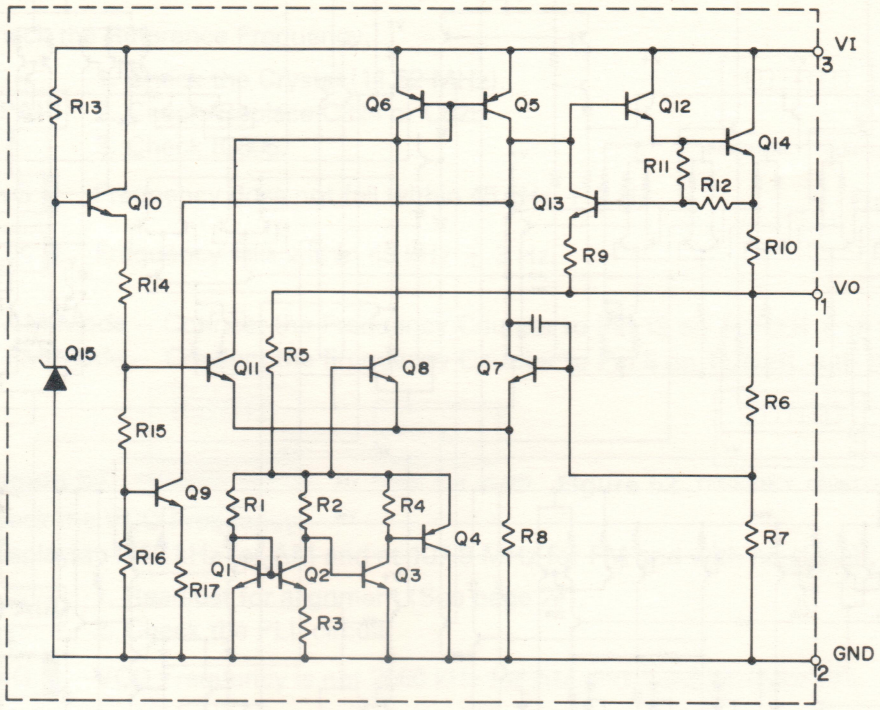


**AN6821**

## SCHEMATIC DIAGRAM

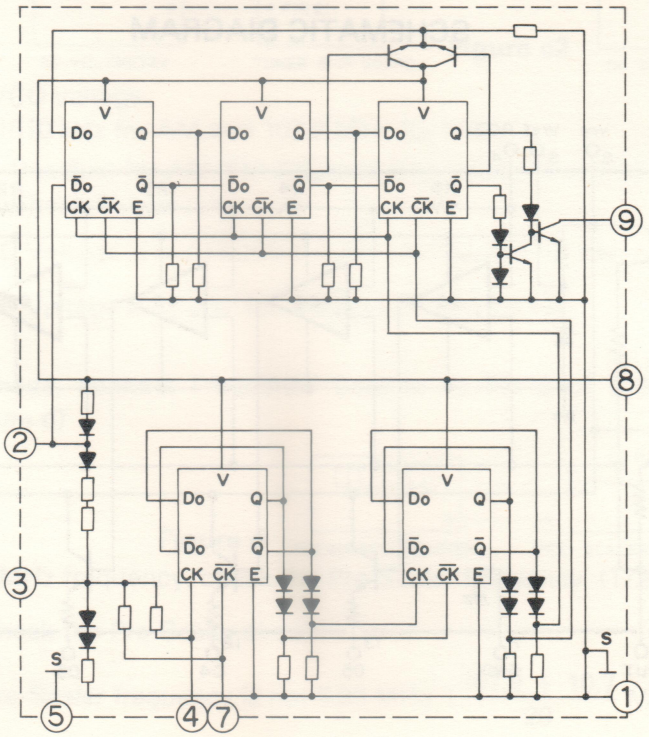

# BLOCK DIAGRAM

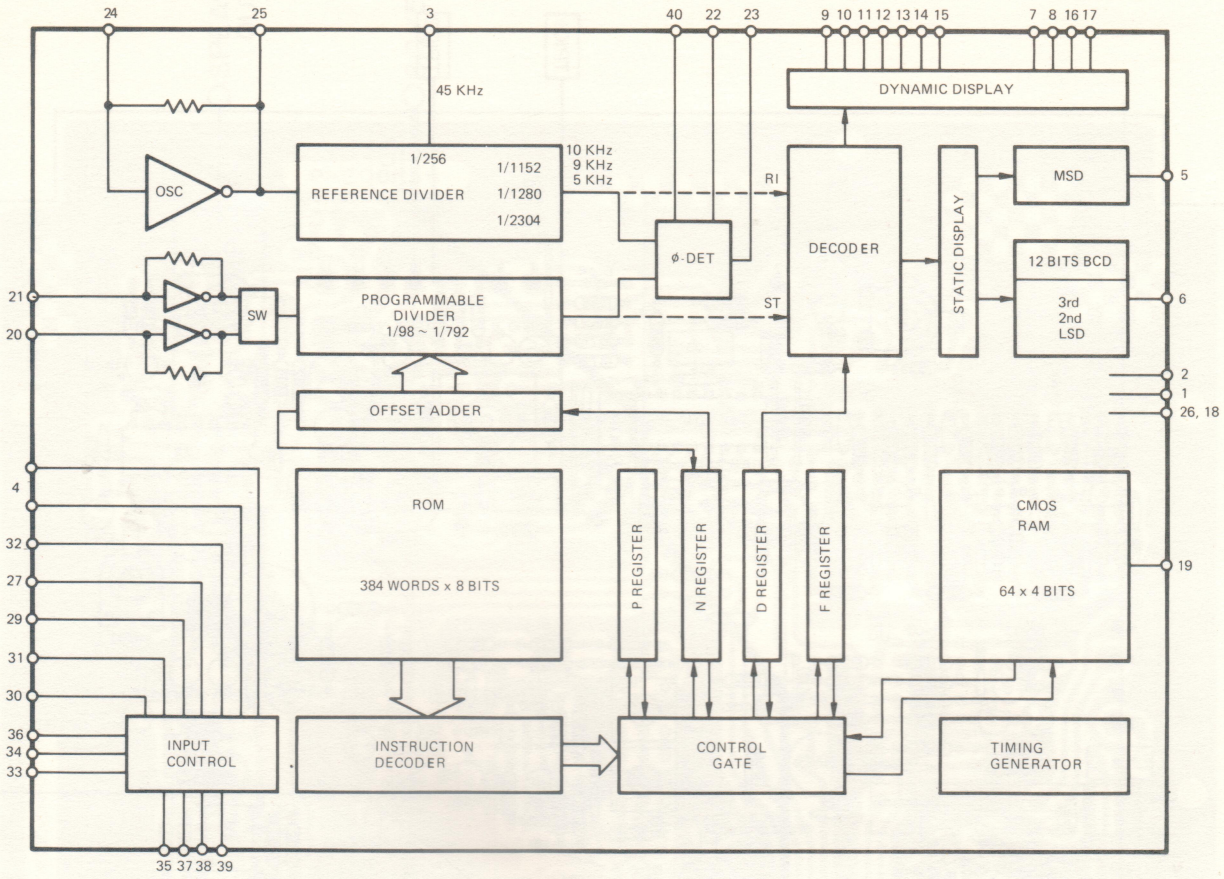

# (15) AM/FM TUNER & IF P.C.B. (TOP & BOTTOM VIEWS)

## TOP VIEW

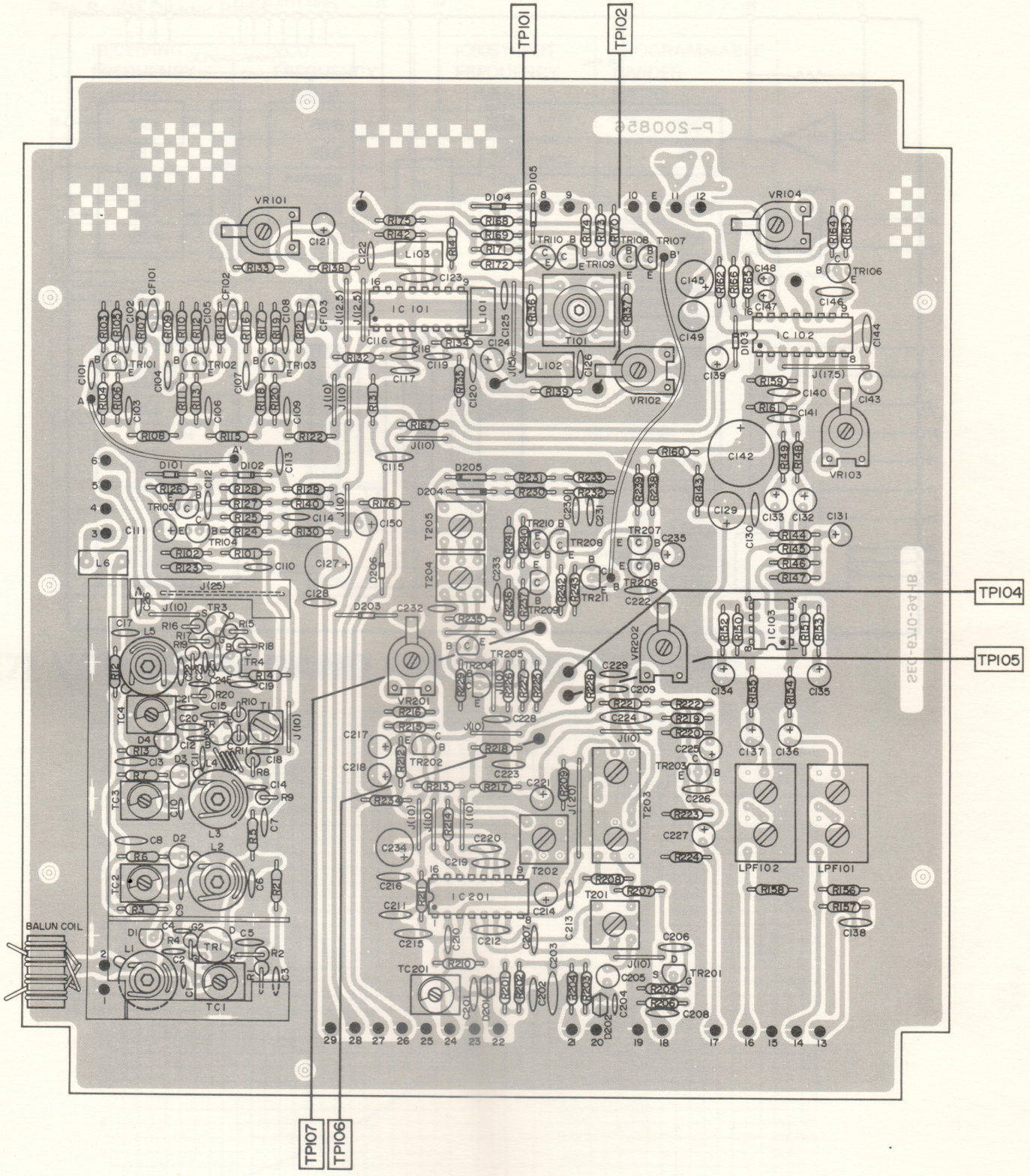

## BOTTOM VIEW

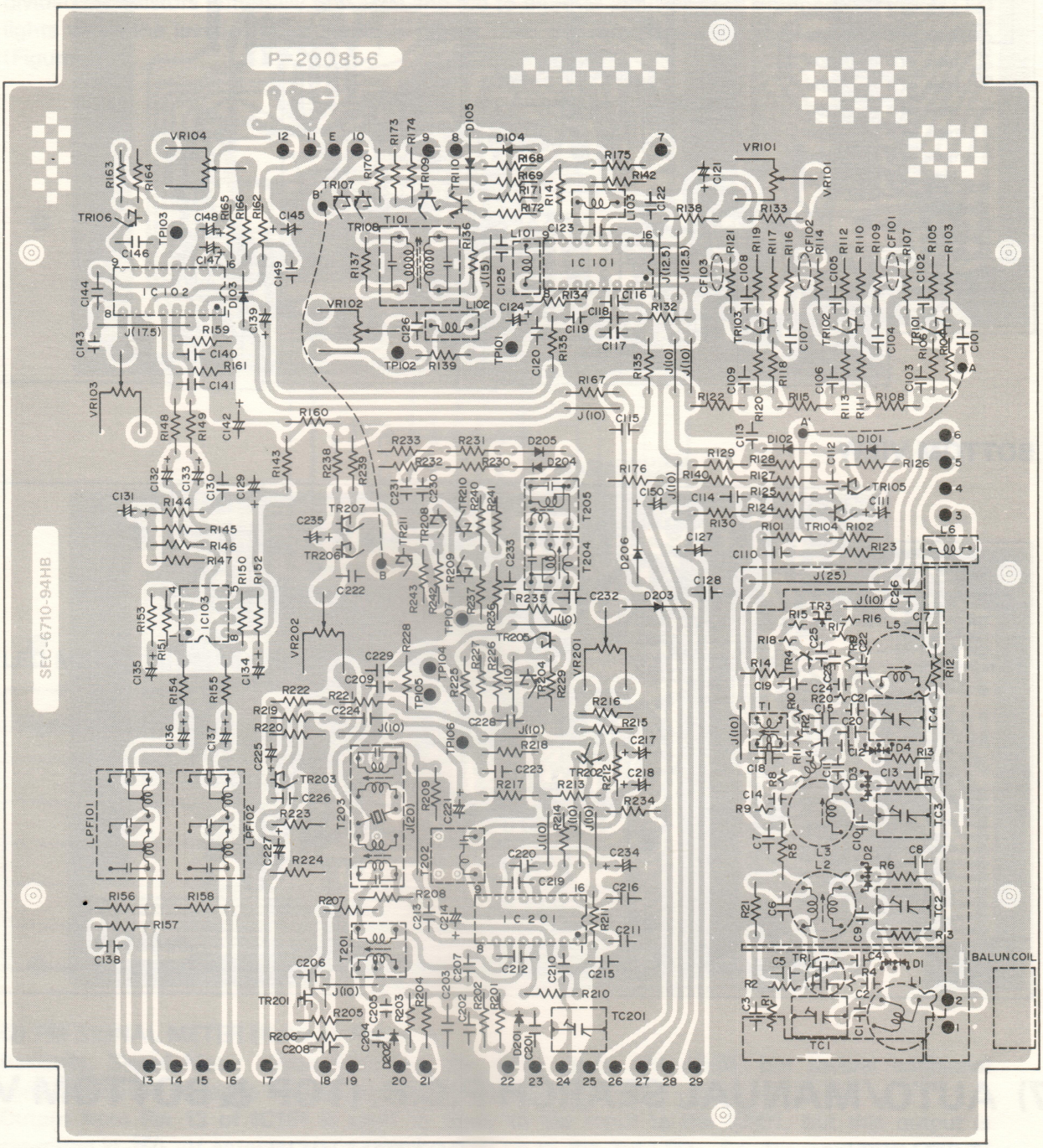

# (16) CONTROLLER P.C.B. (TOP & BOTTOM VIEWS)

## TOP VIEW

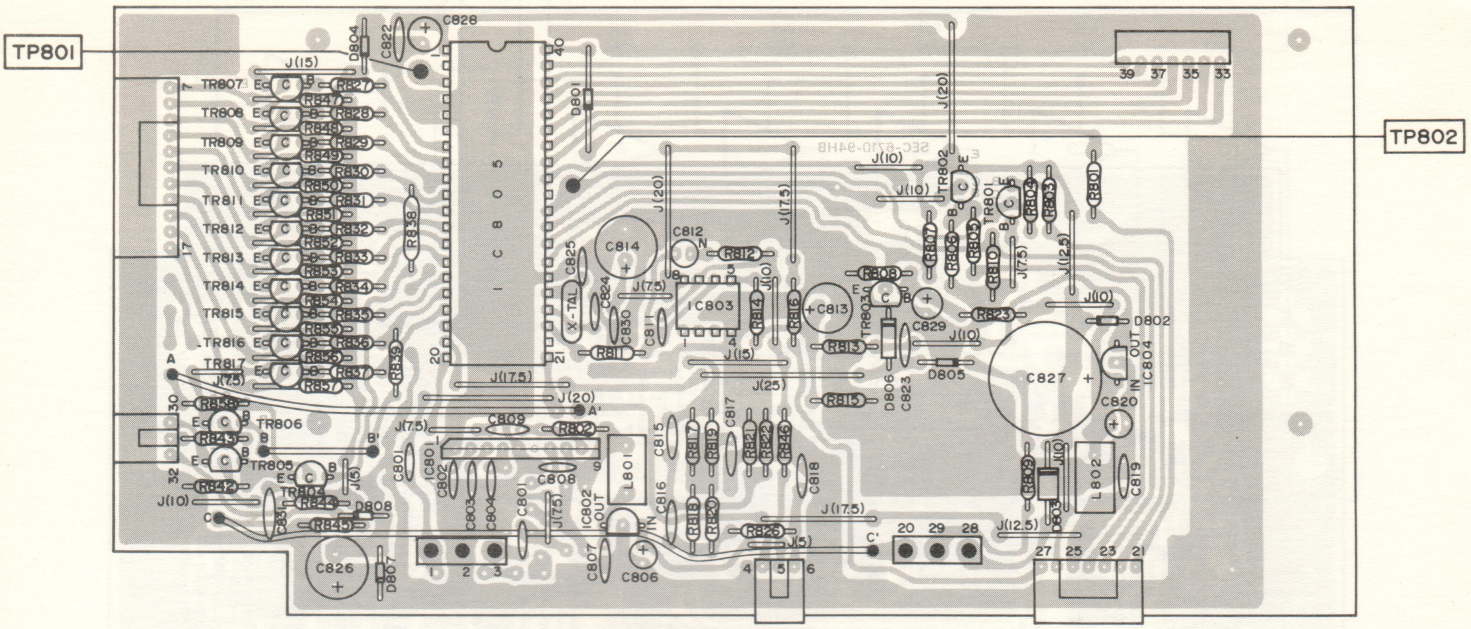


## BOTTOM VIEW

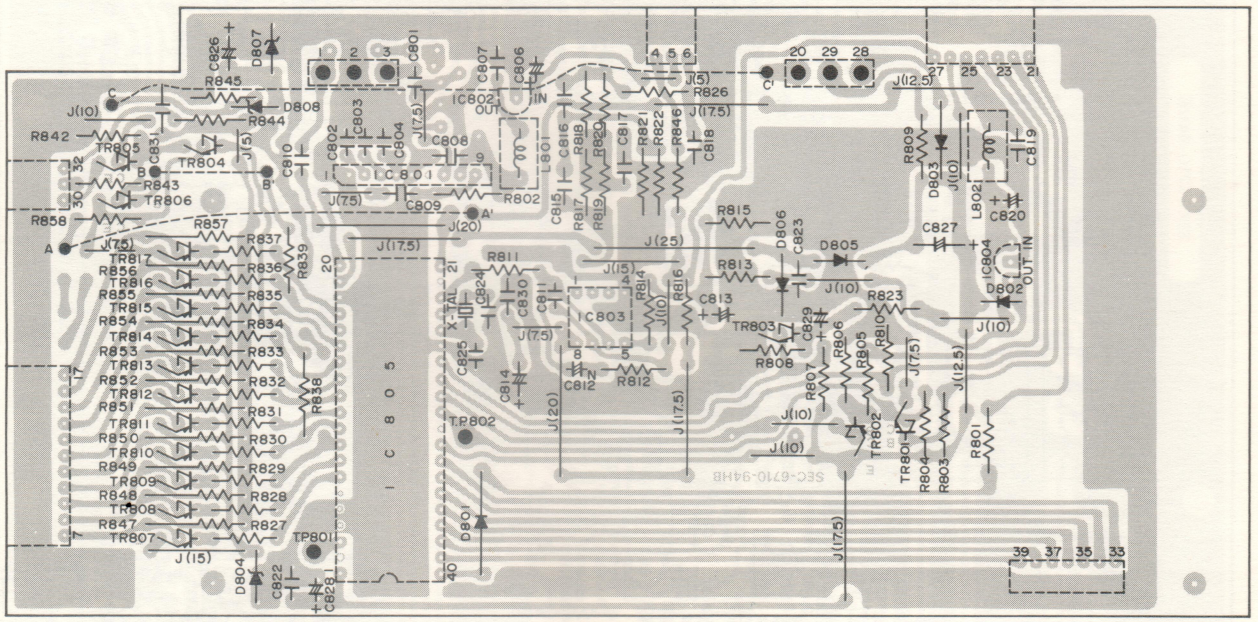


# (17) AUTO/MANUAL SEARCH P.C.B. (TOP & BOTTOM VIEWS)

## TOP VIEW

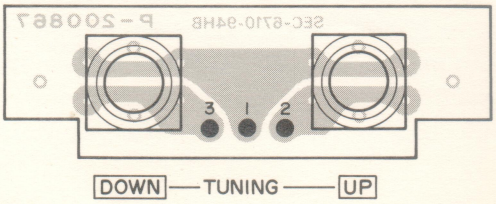


## BOTTOM VIEW

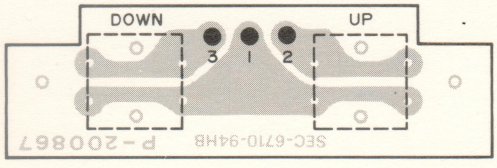

# (18) PRE AMP P.C.B. (TOP & BOTTOM VIEWS)

## TOP VIEW

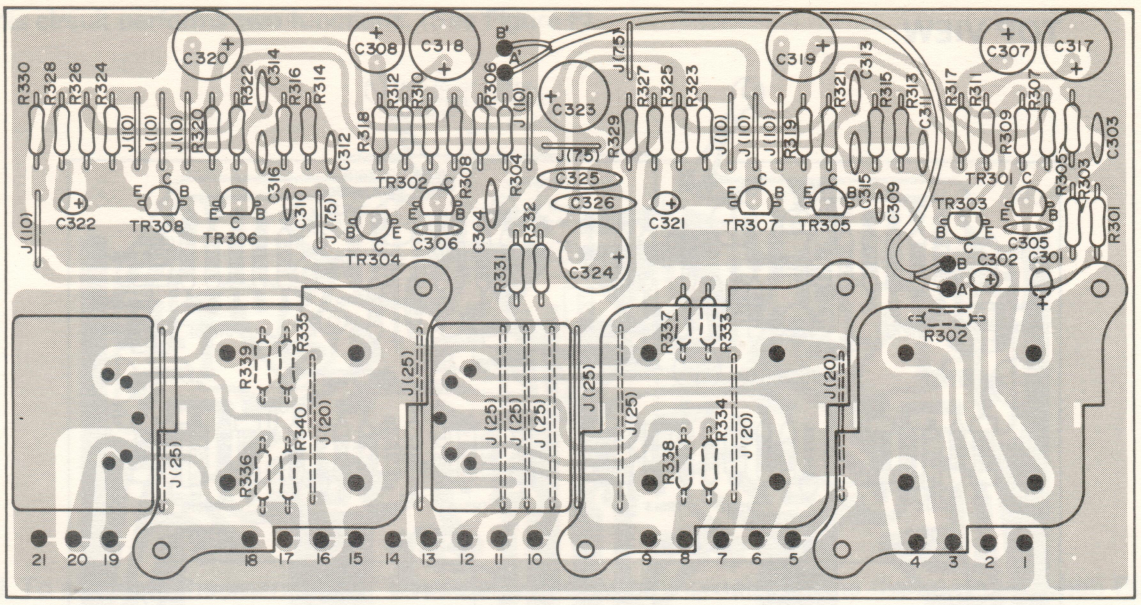


## BOTTOM VIEW

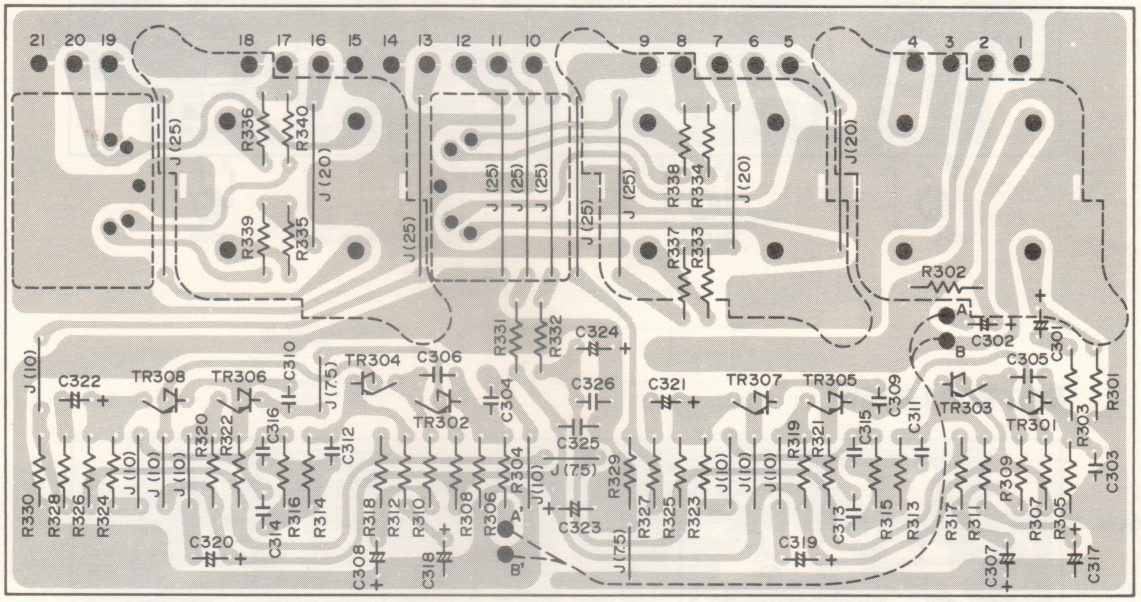


# (19) SPEAKER SWITCH P.C.B. (TOP & BOTTOM VIEWS)

## TOP VIEW

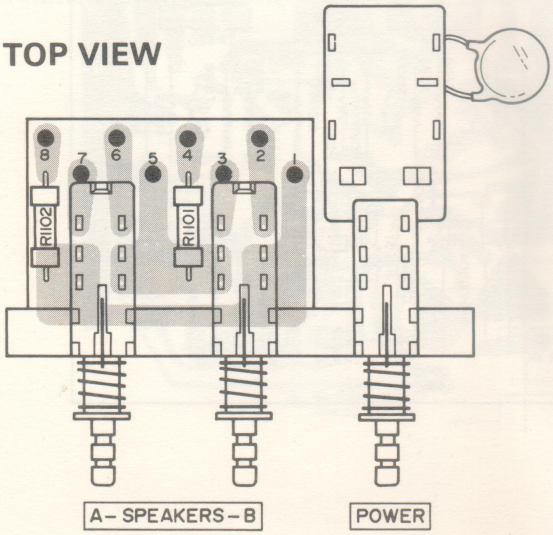


## BOTTOM VIEW

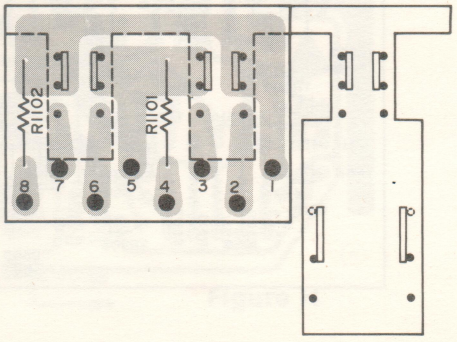

# (20) MAIN AMP P.C.B. (TOP & BOTTOM VIEWS)

## TOP VIEW

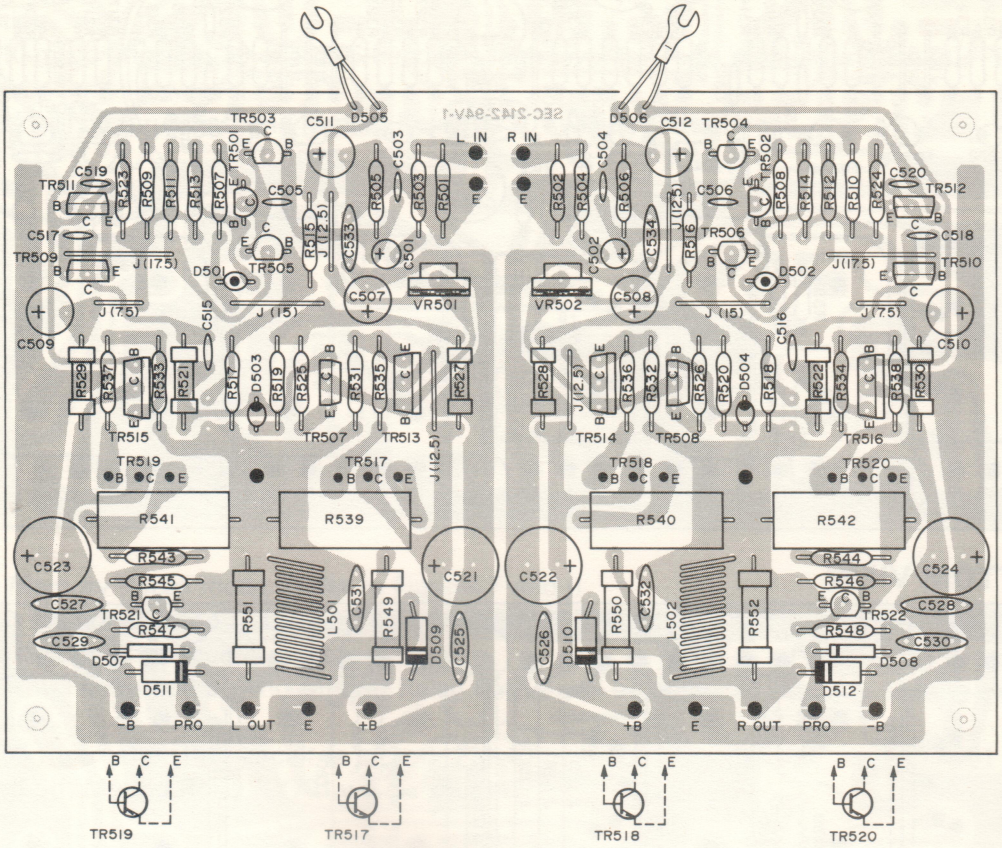


## BOTTOM VIEW

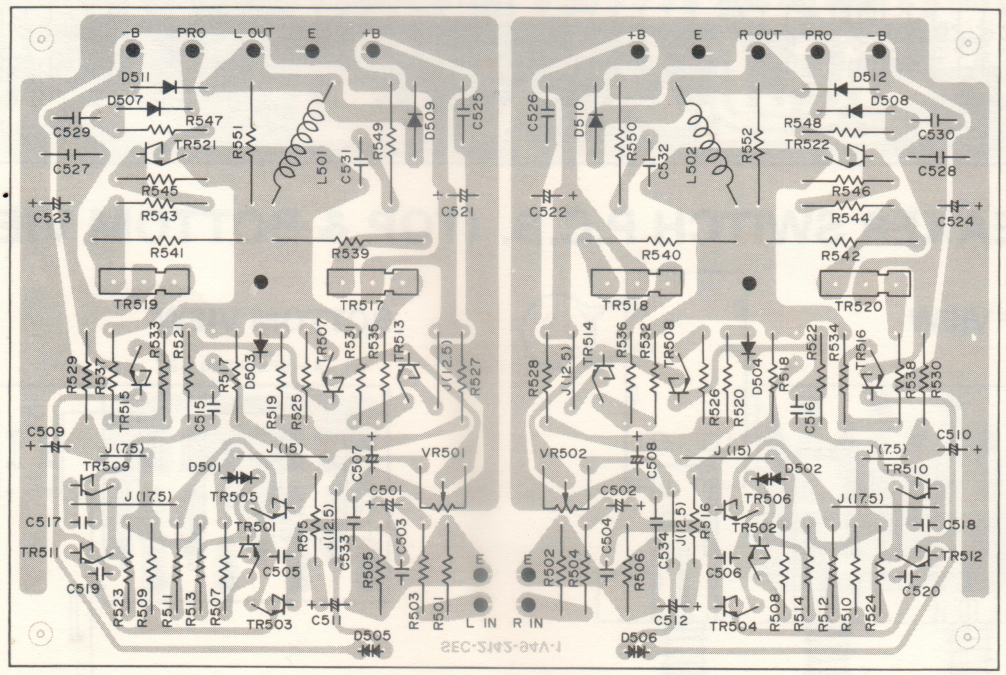

# (21) MODE SWITCH P.C.B. (TOP & BOTOM VIEWS)

**TOP VIEW**

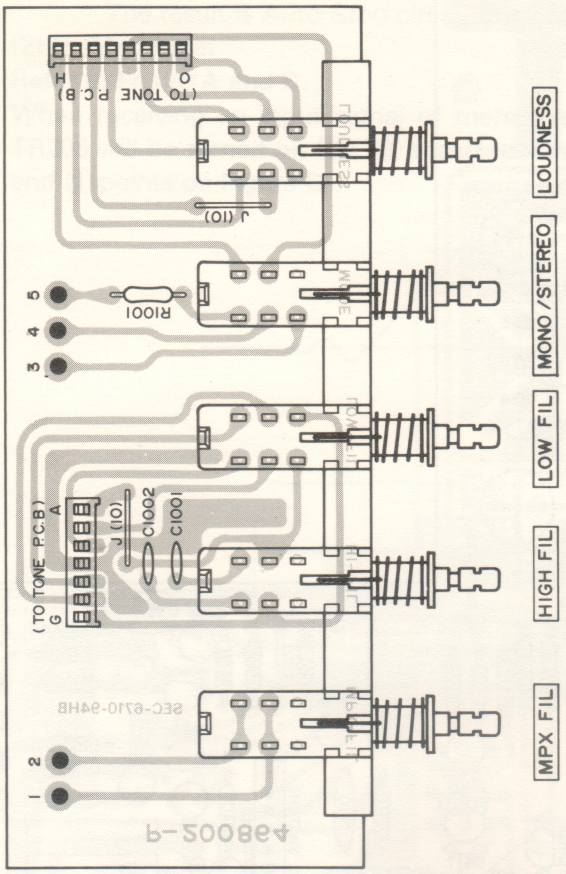


**BOTTOM VIEW**

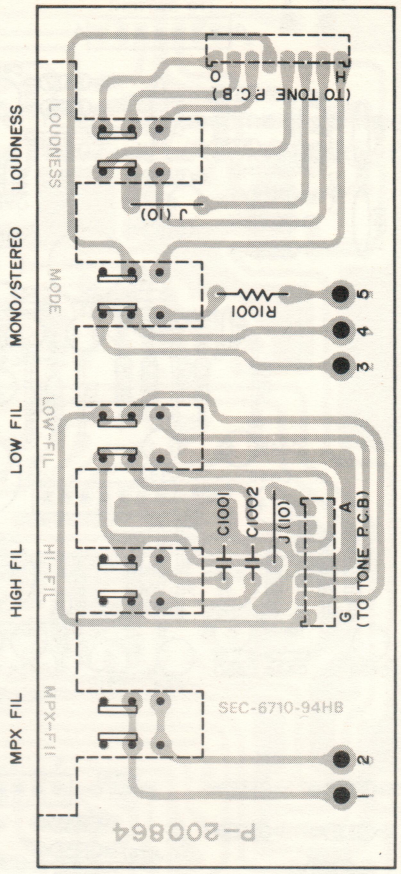


# (22) POWER TRANSISTOR P.C.B. (LEFT) (TOP & BOTTOM VIEWS)

**TOP VIEW**

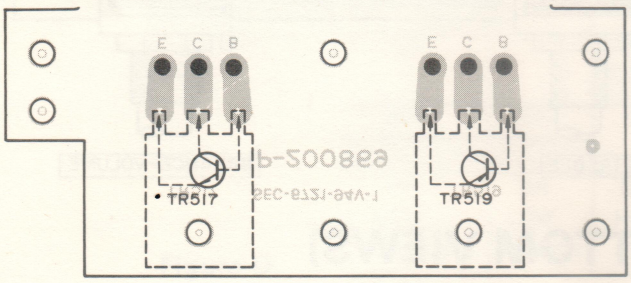


**BOTTOM VIEW**

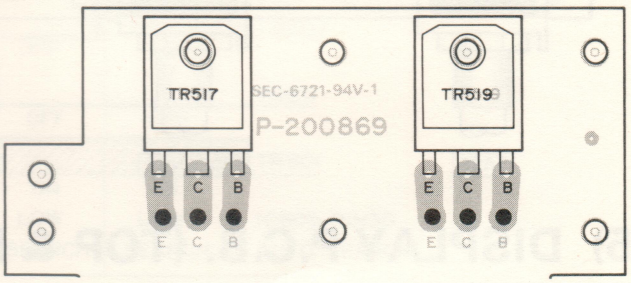


# (23) POWER TRANSISTOR P.C.B. (RIGHT) (TOP & BOTTOM VIEWS)

**TOP VIEW**

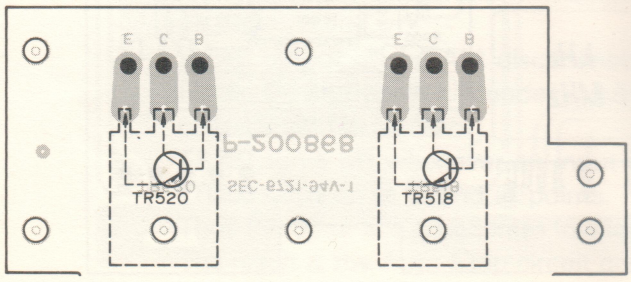


**BOTTOM VIEW**

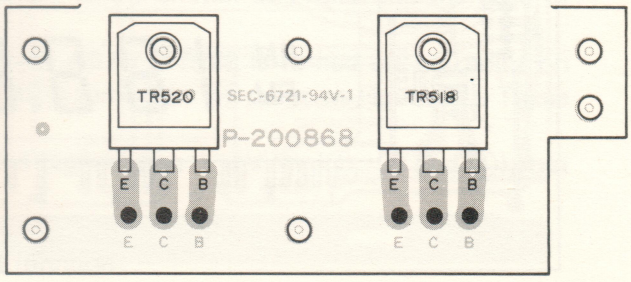

# (24) TONE AMP P.C.B. (TOP & BOTTOM VIEWS)

## TOP VIEW

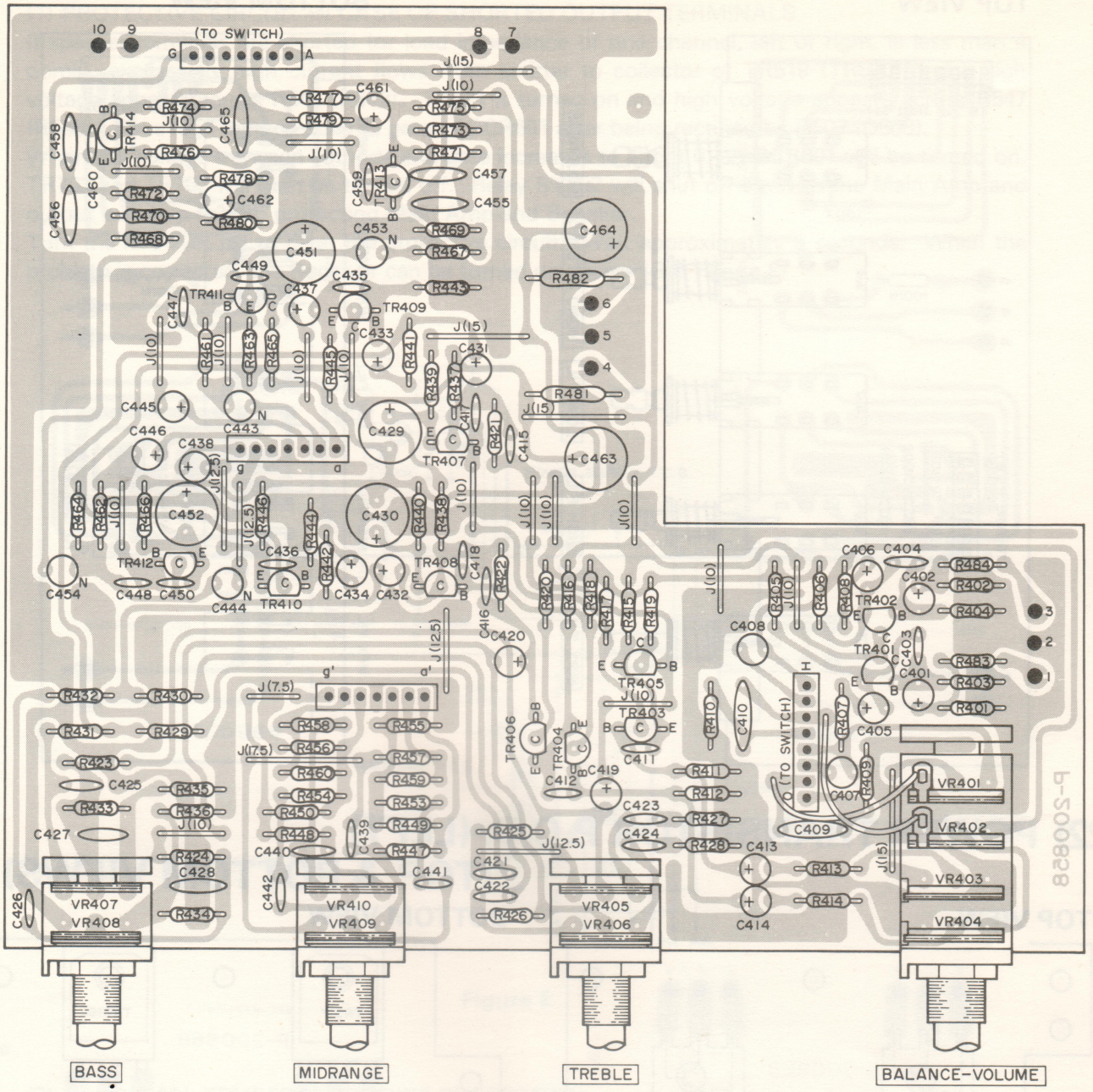


# (25) DISPLAY P.C.B. (TOP & BOTTOM VIEWS)

## TOP VIEW

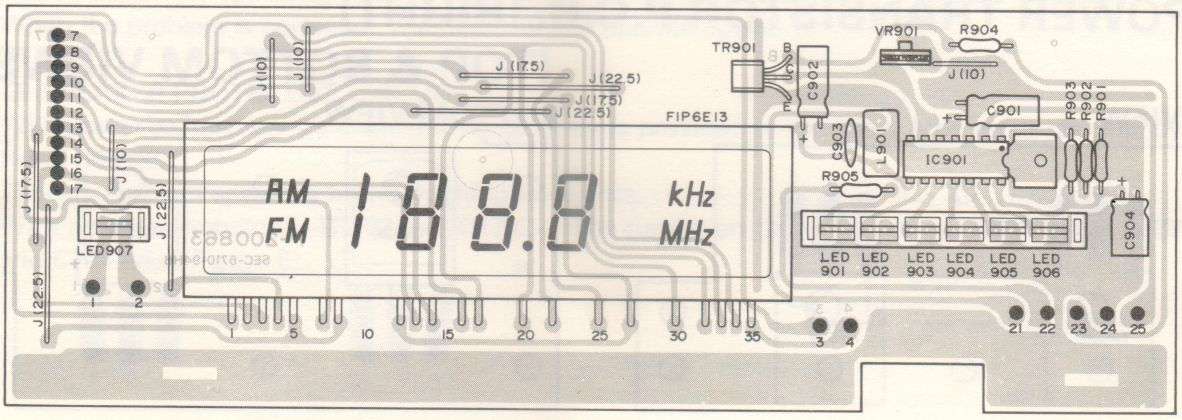

## BOTTOM VIEW

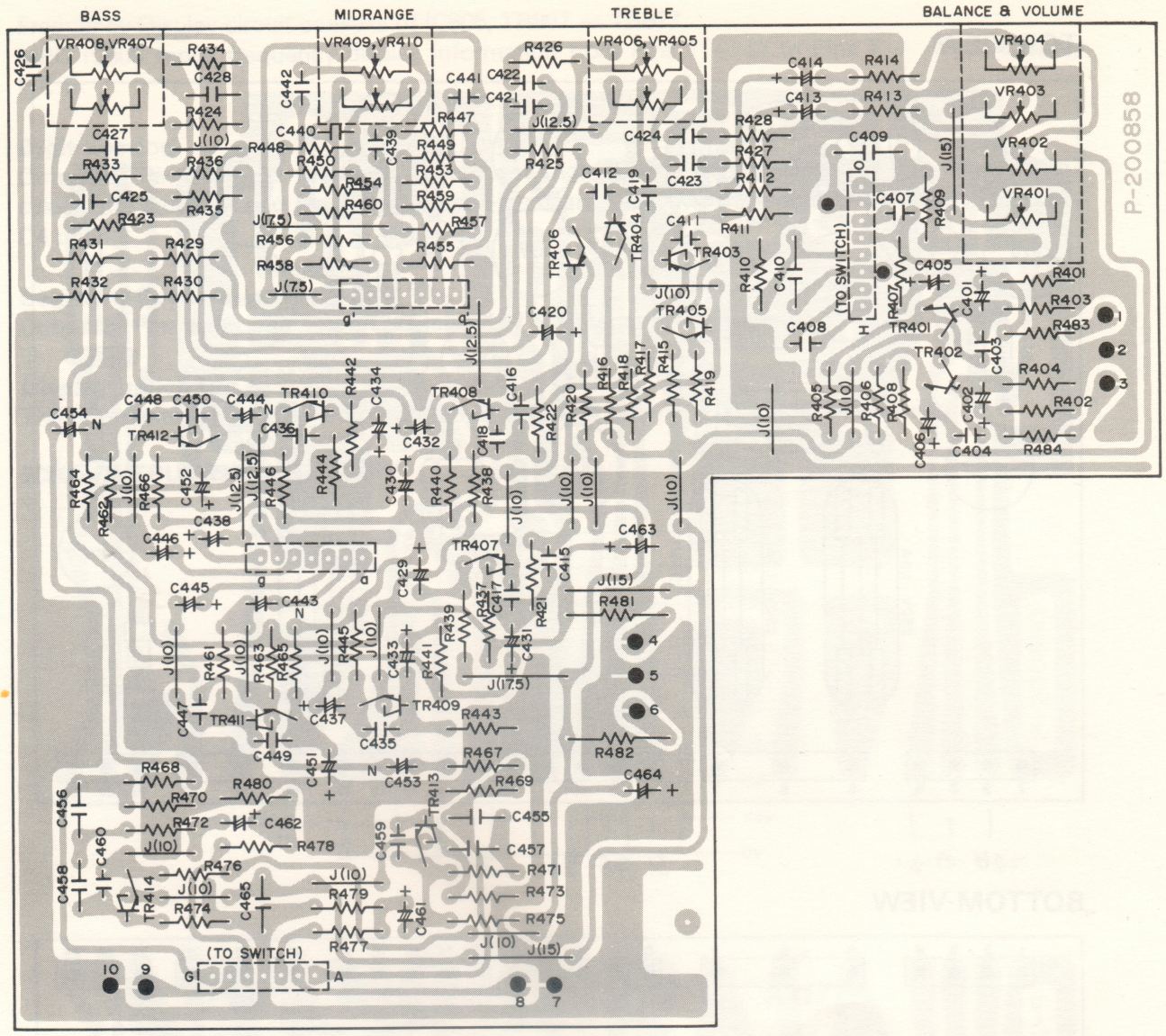


## BOTTOM VIEW

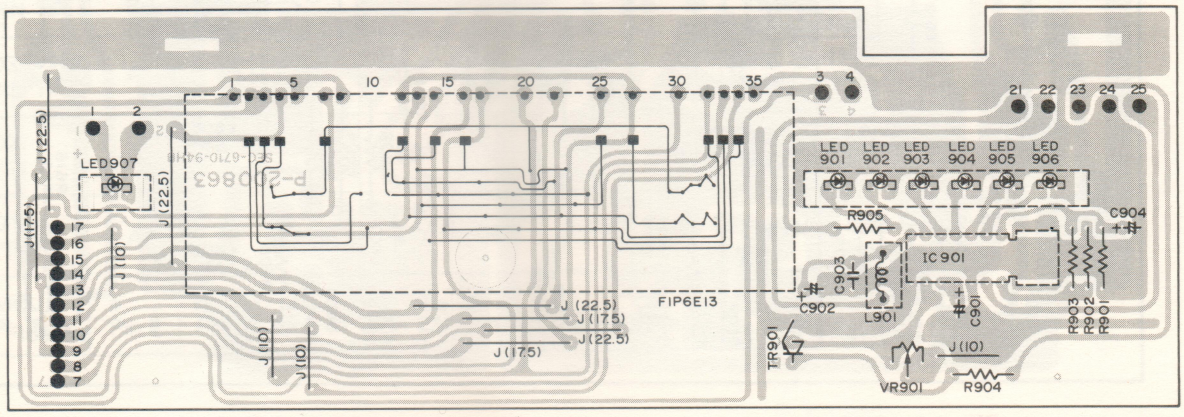

# (26) POWER SUPPLY P.C.B. (TOP & BOTTOM VIEWS)

## TOP VIEW

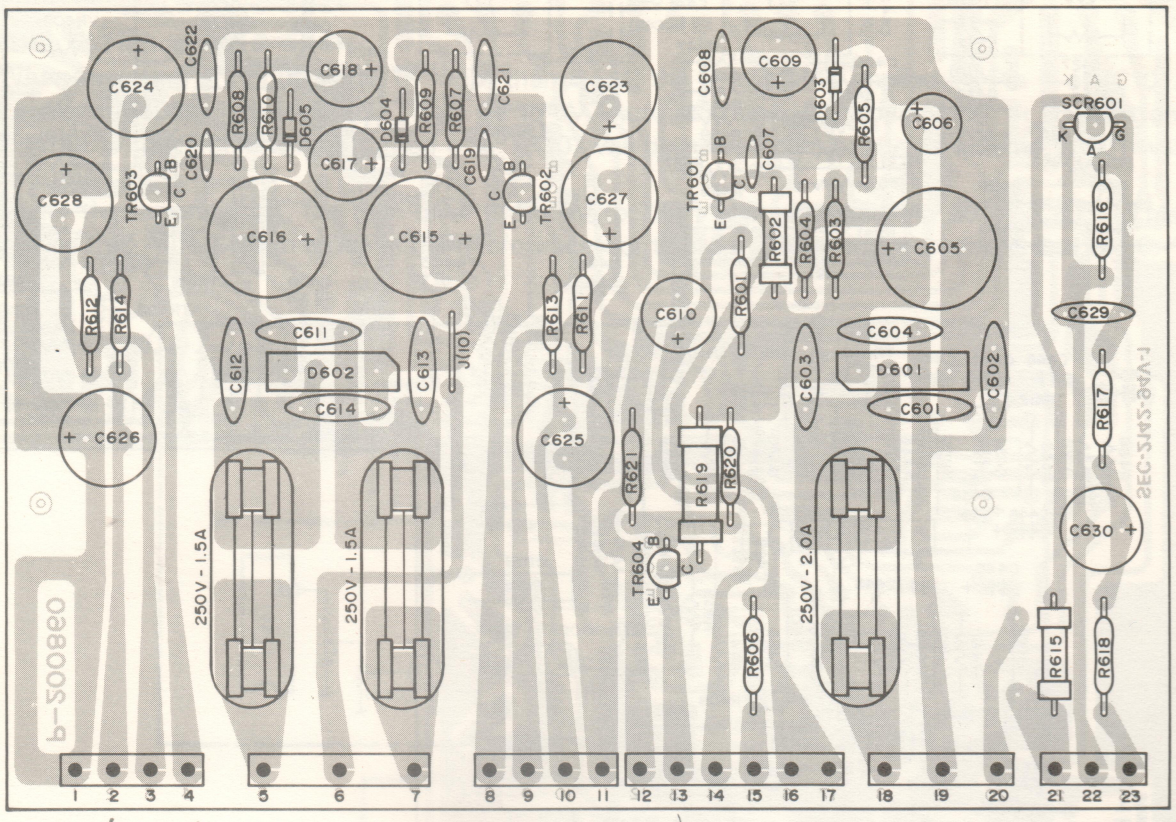


## BOTTOM VIEW

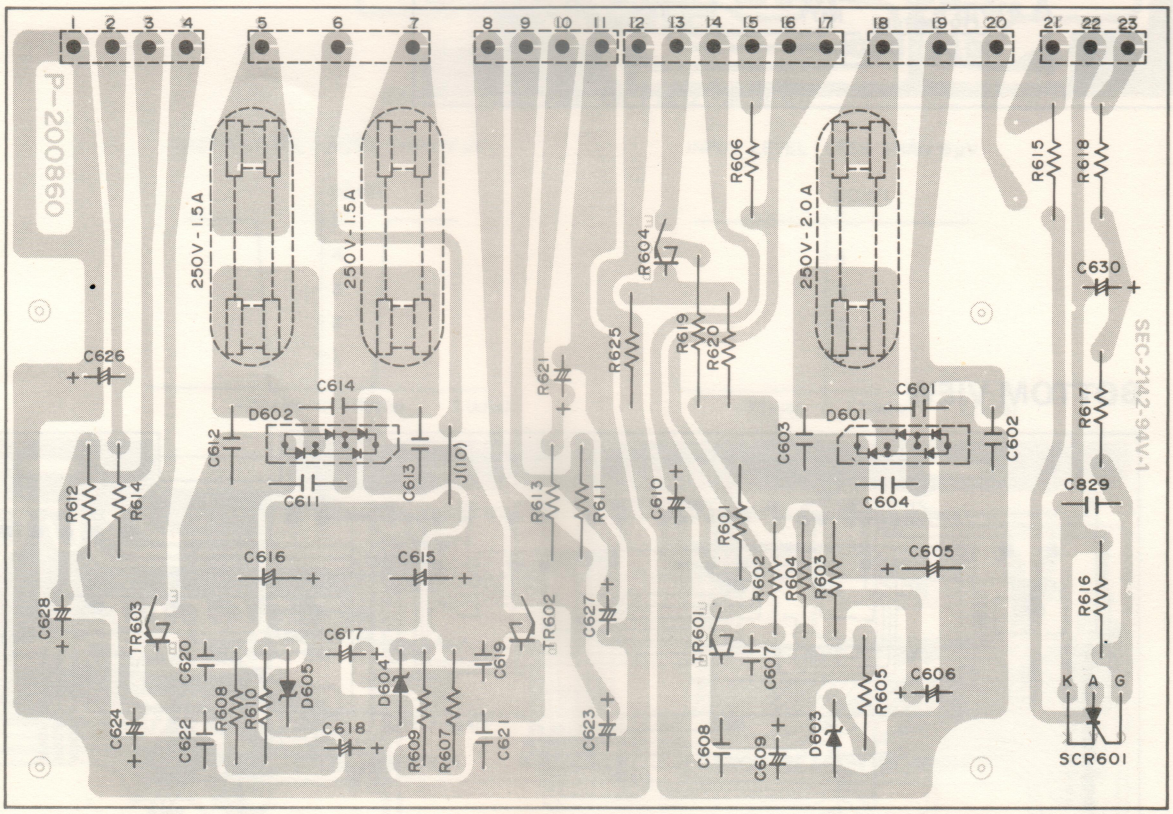

# (27) ROTARY, TAPE & PROTECTOR P.C.B. (TOP & BOTTOM VIEWS)

## TOP VIEW

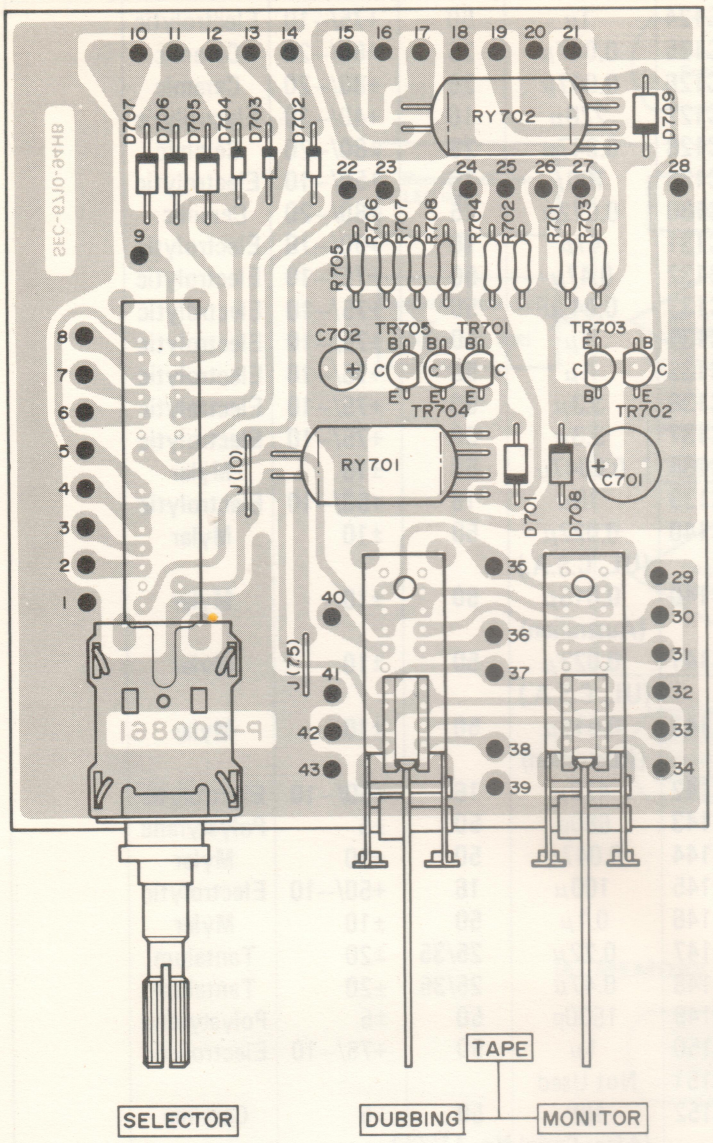


## BOTTOM VIEW

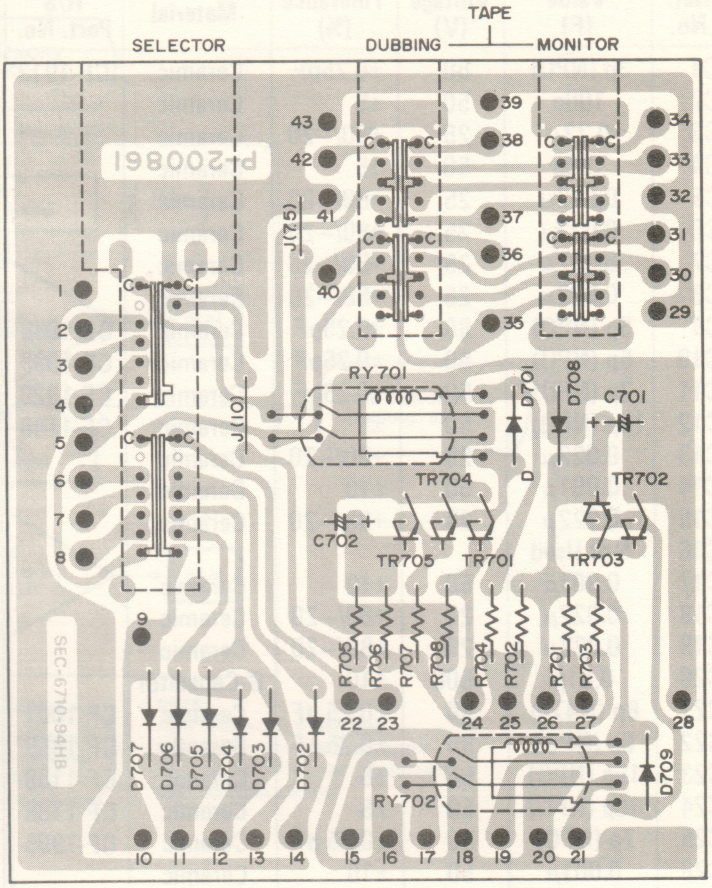


# (28) KEY BOARD SWITCH P.C.B. (TOP & BOTTOM VIEWS)

## TOP VIEW

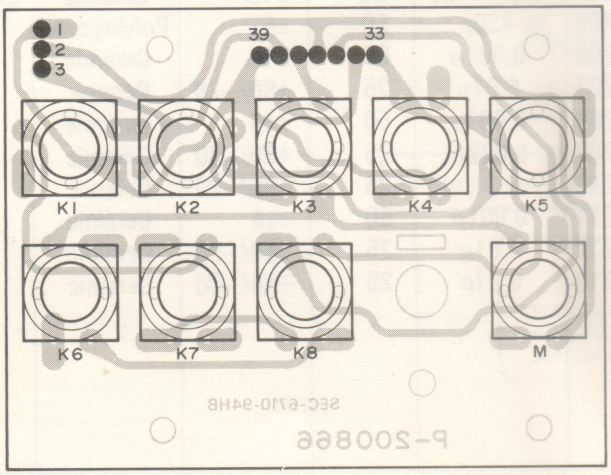


## BOTTOM VIEW

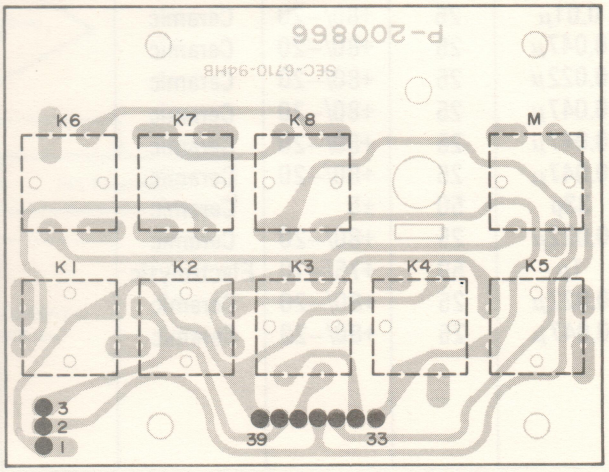

# (29) ELECTRICAL PARTS LIST

## CAPACITORS

| Ref. No. | Value (F) | Voltage (V) | Tolerance (%) | Material | R/S Part. No. |
|---|---|---|---|---|---|
| C1 | 3p (NPO) | 50 | ±0.25pF | Ceramic | CF-1913 |
| C2 | 100p | 50 | ±5 | Ceramic | |
| C3 | 0.22μ | 25 | +80/−20 | Ceramic | |
| C4 | 100p | 50 | ±5 | Ceramic | |
| C5 | 0.022μ | 25 | +80/−20 | Ceramic | |
| C6 | 0.022μ | 25 | +80/−20 | Ceramic | |
| C7 | 0.022μ | 25 | +80/−20 | Ceramic | |
| C8 | 0.022μ | 25 | +80/−20 | Ceramic | |
| C9 | 5p (NPO) | 50 | ±0.25pF | Ceramic | CF-1099 |
| C10 | 5p (NPO) | 50 | ±0.25pF | Ceramic | CF-1099 |
| C11 | 2p (NPO) | 50 | ±0.25pF | Ceramic | CF-1020 |
| C12 | 15p (NPO) | 50 | ±5 | Ceramic | CF-1188 |
| C13 | 0.022μ | 25 | +80/−20 | Ceramic | |
| C14 | 0.001μ | 50 | ±10 | Ceramic | |
| C15 | 0.022μ | 25 | +80/−20 | Ceramic | |
| C16 | Not Used | | | | |
| C17 | 0.001μ | 50 | +10 | Ceramic | |
| C18 | 0.022μ | 25 | +80/−20 | Ceramic | |
| C19 | 0.022μ | 25 | +80/−20 | Ceramic | |
| C20 | 0.51p | 500 | ±10 | G-Capacitor | |
| C21 | 6p (N470) | 50 | ±0.25 pF | Ceramic | CF-1001 |
| C22 | 6p (NPO) | 50 | ±0.25 pF | Ceramic | CF-1855 |
| C23 | 15p (NPO) | 50 | ±5 | Ceramic | CF-1188 |
| C24 | 15p (NPO) | 50 | ±5 | Ceramic | CF-1188 |
| C25 | 7p (NPO) | 50 | ±0.25 pF | Ceramic | CF-1905 |
| C26 | 0.001μ | 50 | ±10 | Ceramic | |
| C101 | 0.01μ | 25 | +80/−20 | Ceramic | |
| C102 | 0.022μ | 25 | +80/−20 | Ceramic | |
| C103 | 0.047μ | 25 | +80/−20 | Ceramic | |
| C104 | 0.01μ | 25 | +80/−20 | Ceramic | |
| C105 | 0.022μ | 25 | +80/−20 | Ceramic | |
| C106 | 0.047μ | 25 | +80/−20 | Ceramic | |
| C107 | 0.01μ | 25 | +80/−20 | Ceramic | |
| C108 | 0.022μ | 25 | +80/−20 | Ceramic | |
| C109 | 0.047μ | 25 | +80/−20 | Ceramic | |
| C110 | 0.01μ | 25 | +80/−20 | Ceramic | |
| C111 | 1μ | 50 | +75/−10 | Electrolytic | |
| C112 | 0.01μ | 25 | +80/−20 | Ceramic | |
| C113 | 0.01μ | 25 | +80/−20 | Ceramic | |
| C114 | 0.047μ | 25 | +80/−20 | Ceramic | |
| C115 | 0.022μ | 25 | +80/−20 | Ceramic | |
| C116 | 0.047μ | 25 | +80/−20 | Ceramic | |
| C117 | 0.047μ | 25 | +80/−20 | Ceramic | |
| C118 | 0.047μ | 25 | +80/−20 | Ceramic | |
| C119 | 33p | 50 | ±5 | Ceramic | |
| C120 | 0.022μ | 25 | +80/−20 | Ceramic | |
| C121 | 1μ | 50 | +75/−10 | Electrolytic | |
| C122 | 0.022μ | 25 | +80/−20 | Ceramic | |
| C123 | 0.047μ | 25 | +80/−20 | Ceramic | |
| C124 | 1μ | 50 | +75/−10 | Electrolytic | |
| C125 | 0.047μ | 25 | +80/−20 | Ceramic | |
| C126 | 0.047μ | 25 | +80/−20 | Ceramic | |
| C127 | 220μ | 16 | +40/−10 | Electrolytic | |
| C128 | 0.047μ | 25 | +80/−20 | Ceramic | |
| C129 | 100μ | 16 | +50/−10 | Electrolytic | |
| C130 | 0.022μ | 25 | +80/−20 | Ceramic | |
| C131 | 47μ | 10 | +50/−10 | Electrolytic | |
| C132 | 0.47μ | 50 | +75/−10 | Electrolytic | |
| C133 | 0.047μ | 50 | +75/−10 | Electrolytic | |
| C134 | 1μ | 50 | +75/−10 | Electrolytic | |
| C135 | 1μ | 50 | +75/−10 | Electrolytic | |
| C136 | 3.3μ | 50 | +75/−10 | Electrolytic | |
| C137 | 3.3μ | 50 | +75/−10 | Electrolytic | |
| C138 | 0.0047μ | 50 | ±10 | Mylar | |
| C139 | 10μ | 16 | +50/−10 | Electrolytic | |
| C140 | 0.022μ (UL, C.S.A.) | 50 | ±10 | Mylar | |
| C140 | 0.015μ (Australian) | 50 | ±10 | Mylar | |
| C141 | 0.022μ (UL, C.S.A.) | 50 | ±10 | Mylar | |
| C141 | 0.015μ (Australian) | 50 | ±10 | Mylar | |
| C142 | 470μ | 16 | +50/−10 | Electrolytic | |
| C143 | 680p | 50 | ±5 | Polystyrene | |
| C144 | 0.047μ | 50 | ±10 | Mylar | |
| C145 | 100μ | 16 | +50/−10 | Electrolytic | |
| C146 | 0.1μ | 50 | ±10 | Mylar | |
| C147 | 0.22μ | 25/35 | ±20 | Tantalum | |
| C148 | 0.47μ | 25/35 | ±20 | Tantalum | |
| C149 | 1500p | 50 | ±5 | Polystyrene | |
| C150 | 1μ | 50 | +75/−10 | Electrolytic | |
| C151 | Not Used | | | | |
| C152 | 18P (After Serial No. 11666) | 50 | ±5 | Ceramic | |
| C201 | 0.047μ | 25 | +80/−20 | Ceramic | |
| C202 | 0.047μ | 25 | +80/−20 | Ceramic | |
| C203 | 0.047μ | 50 | ±10 | Mylar | |
| C204 | 18p (NPO) | 50 | ±10 | Ceramic | CF-1853 |
| C205 | 430p | 50 | ±5 | Polystyrene | |
| C206 | 0.001μ | 50 | ±10 | Ceramic | |
| C207 | 0.01μ | 25 | +80/−20 | Ceramic | |
| C208 | 0.001μ | 50 | ±10 | Ceramic | |
| C209 | 0.022μ | 25 | +80/−20 | Ceramic | |
| C210 | 0.01μ | 25 | +80/−20 | Ceramic | |
| C211 | 0.001μ | 50 | ±10 | Ceramic | |
| C212 | 0.01μ | 25 | +80/−20 | Ceramic | |
| C213 | 0.01μ | 25 | +80/−20 | Ceramic | |

| Ref. No. | Value (F) | Voltage (V) | Tolerance (%) | Material | R/S Part. No. |
|---|---|---|---|---|---|
| C214 | 10μ | 16 | +50/−10 | Electrolytic | |
| C215 | 0.022μ | 25 | +80/−20 | Ceramic | |
| C216 | 0.047μ | 25 | +80/−20 | Ceramic | |
| C217 | 3.3μ | 50 | +75/−10 | Electrolytic | |
| C218 | 4.7μ | 25 | +50/−10 | Electrolytic | |
| C219 | 0.001μ | 50 | ±10 | Ceramic | |
| C220 | 0.01μ | 25 | +80/−20 | Ceramic | |
| C221 | 3.3μ | 50 | +75/−10 | Electrolytic | |
| C222 | 0.047μ | 25 | +80/−20 | Ceramic | |
| C223 | 0.033μ | 50 | ±10 | Mylar | |
| C224 | 0.15μ | 50 | ±10 | Mylar | |
| C225 | 0.47μ | 50 | +75/−10 | Electrolytic | |
| C226 | 220p | 50 | ±5 | Ceramic | |
| C227 | 0.47μ | 50 | +75/−10 | Electrolytic | |
| C228 | 0.022μ | 25 | +80/−20 | Ceramic | |
| C229 | 0.022μ | 25 | +80/−20 | Ceramic | |
| C230 | 0.0047μ | 50 | ±10 | Ceramic | |
| C231 | 0.0047μ | 50 | ±10 | Ceramic | |
| C232 | 0.01μ | 25 | +80/−20 | Ceramic | |
| C233 | 0.01μ | 25 | +80/−20 | Ceramic | |
| C234 | 100μ | 16 | +50/−10 | Electrolytic | |
| C235 | 22μ | 10 | +50/−10 | Electrolytic | |
| C301/302 | 2.2μ | 35 | ±20 | Tantalum | |
| C303/304 | 220p | 50 | ±5 | Ceramic | |
| C305/306 | 100p | 50 | ±5 | Ceramic | |
| C307/308 | 47μ | 25 | +50/−10 | Electrolytic | |
| C309/C310 | 47p | 50 | ±5 | Ceramic | |
| C311/C312 | 0.0022μ | 50 | ±5 | Mylar | |
| C313/C314 | 0.0047μ | 50 | ±5 | Mylar | |
| C315/C316 | 0.0027μ | 50 | ±5 | Mylar | |
| C317/C318 | 100μ | 16 | +50/−10 | Electrolytic | |
| C319/C320 | 100μ | 25 | +50/−10 | Electrolytic | |
| C321/C322 | 0.68μ | 35 | ±10 | Tantalum | |
| C323/C324 | 100μ | 35 | +50/−10 | Electrolytic | |
| C325/C326 | 0.04μ | 50 | +80/−20 | Ceramic | |
| C401/C402 | 1μ | 50 | +75/−10 | Electrolytic | |
| C403/C404 | 100p | 50 | ±5 | Ceramic | |
| C405/C406 | 3.3μ | 50 | +75/−10 | Electrolytic | |
| C407/C408 | 330p | 50 | ±5 | Polystyrene | |
| C409/C410 | 0.22μ | 50 | ±10 | Mylar | |
| C411/C412 | 22p | 50 | ±5 | Ceramic | |
| C413/C414 | 2.2μ | 50 | +75/−10 | Electrolytic | |
| C415/C416 | 47p | 50 | ±5 | Ceramic | |
| C417/C418 | 6P | 50 | ±0.25pF | Ceramic | |
| C419/C420 | 4.7μ | 50 | +50/−10 | Electrolytic | |
| C421/C422 | 0.0033μ | 50 | ±10 | Mylar | |
| C423/C424 | 0.018μ | 50 | ±10 | Mylar | |
| C425/C426 | 0.015μ | 50 | ±10 | Mylar | |
| C427/C428 | 0.1μ | 50 | ±10 | Mylar | |
| C429/C430 | 100μ | 25 | +50/−10 | Electrolytic | |
| C431/C432 | 4.7μ | 50 | +50/−10 | Electrolytic | |
| C433/C434 | 2.2μ | 50 | +75/−10 | Electrolytic | |
| C435/C436 | 100p | 50 | +5 | Ceramic | |
| C437/C438 | 4.7 μ | 50 | +50/−10 | Electrolytic | |
| C439/C440 | 0.0033μ | 50 | ±10 | Mylar | |

| Ref. No. | Value (F) | Voltage (V) | Tolerance (%) | Material | R/S Part. No. |
|---|---|---|---|---|---|
| C441/C442 | 0.0027μ | 50 | ±10 | Mylar | |
| C443/C444 | 2.2μ (non-polar) | 25 | +75/−10 | Electrolytic | |
| C445/C446 | 0.47μ | 50 | +75/−10 | Electrolytic | |
| C447/C448 | 30p | 50 | ±5 | Ceramic | |
| C449/C450 | 100p | 50 | ±5 | Ceramic | |
| C451/C452 | 470μ | 25 | +50/−10 | Electrolytic | |
| C453/C454 | 2.2μ (non-polar) | 25 | +75/−10 | Electrolytic | |
| C455/C456 | 0.068 μ | 50 | ±10 | Mylar | |
| C457/C458 | 0.033 μ | 50 | ±10 | Mylar | |
| C459/C460 | 150p | 50 | ±5 | Ceramic | |
| C461/C462 | 2.2μ | 50 | +75/−10 | Electrolytic | |
| C463/C464 | 220μ | 25 | +50/−10 | Electrolytic | |
| C465 | 0.04μ | 50 | +80/−20 | Ceramic | |
| C501/C502 | 3.3μ | 50 | +75/−10 | Electrolytic | |
| C503/C504 | 220p | 50 | ±5 | Ceramic | |
| C505/C506 | 33p | 50 | ±5 | Ceramic | |
| C507/C508 | 47μ | 50 | +50/−10 | Electrolytic | |
| C509/C510 | 47μ | 50 | +50/−10 | Electrolytic | |
| C511/C512 | 47μ | 25 | +50/−10 | Electrolytic | |
| C513/C514 | Not Used | | | | |
| C515/C516 | 0.015μ | 50 | ±10 | Mylar | |
| C517/C518 | 330p | 50 | ±10 | Ceramic | |
| C519/C520 | 36p | 50 | ±5 | Ceramic | |
| C521/C522 | 100μ | 50 | +50/−10 | Electrolytic | |
| C523/C524 | 100μ | 50 | +50/−10 | Electrolytic | |
| C525/C526 | 0.047μ | 100 | ±20 | Ceramic | |
| C527/C528 | 0.047μ | 100 | ±20 | Ceramic | |
| C529/C530 | 0.04μ | 50 | +80/−20 | Ceramic | |
| C531/C532 | 0.1μ | 100 | ±10 | Mylar | |
| C533/C534 | 0.1μ | 50 | ±10 | Mylar | |
| C601 | 0.04μ | 50 | +80/−20 | Ceramic | |
| C602 | 0.04μ | 50 | +80/−20 | Ceramic | |
| C603 | 0.04μ | 50 | +80/−20 | Ceramic | |
| C604 | 0.04μ | 50 | +80/−20 | Ceramic | |
| C605 | 1000μ | 25 | +50/−10 | Electrolytic | |
| C606 | 47μ | 25 | +50/−10 | Electrolytic | |
| C607 | 100p | 50 | ±5 | Ceramic | |
| C608 | 0.04μ | 50 | +80/−20 | Ceramic | |
| C609 | 100μ | 16 | +50/−10 | Electrolytic | |
| C610 | 100μ | 25 | +50/−10 | Electrolytic | |
| C611 | 0.047μ | 100 | ±20 | Ceramic | |
| C612 | 0.047μ | 100 | ±20 | Ceramic | |
| C613 | 0.047μ | 100 | ±20 | Ceramic | |
| C614 | 0.047μ | 100 | ±20 | Ceramic | |
| C615 | 470μ | 50 | +50/−10 | Electrolytic | |
| C616 | 470μ | 50 | +50/−10 | Electrolytic | |
| C617 | 100μ | 35 | +50/−10 | Electrolytic | |
| C618 | 100μ | 35 | +50/−10 | Electrolytic | |
| C619 | 100p | 50 | ±5 | Ceramic | |
| C620 | 100p | 50 | ±5 | Ceramic | |
| C621 | 0.04μ | 50 | +80/−20 | Ceramic | |
| C622 | 0.04μ | 50 | +80/−20 | Ceramic | |
| C623 | 220μ | 35 | +50/−10 | Electrolytic | |

| Ref. No. | Value (F) | Voltage (V) | Tolerance (%) | Material | R/S Part. No. |
|---|---|---|---|---|---|
| C624 | 220μ | 35 | +50/−10 | Electrolytic | |
| C625 | 220μ | 35 | +50/−10 | Electrolytic | |
| C626 | 220μ | 35 | +50/−10 | Electrolytic | |
| C627 | 220μ | 35 | +50/−10 | Electrolytic | |
| C628 | 220μ | 35 | +50/−10 | Electrolytic | |
| C629 | 0.04μ | 50 | +80/−20 | Ceramic | |
| C630 | 220μ | 25 | +50/−10 | Electrolytic | |
| C631 | Not Used | | | | |
| C632 | 0.47μ | 50 | +75/−10 | Electrolytic | |
| | (After Serial No. 11666) | | | | |
| C701 | 220μ | 16 | +50/−10 | Electrolytic | |
| C702 | 33μ | 16 | +50/−10 | Electrolytic | |
| C801 | 0.001μ | 50 | ±10 | Ceramic | |
| C802 | 0.001μ | 50 | ±10 | Ceramic | |
| C803 | 0.001μ | 50 | ±10 | Ceramic | |
| C804 | 0.001μ | 50 | ±10 | Ceramic | |
| C805 | Not Used | | | | |
| C806 | 0.47μ | 50 | +75/−10 | Electrolytic | |
| C807 | 0.01μ | 50 | +80/−20 | Ceramic | |
| C808 | 0.001μ | 50 | ±10 | Ceramic | |
| C809 | 0.01μ | 50 | +80/−20 | Ceramic | |
| C810 | 0.01μ | 50 | +80/−20 | Ceramic | |
| C811 | 0.0022μ | 50 | ±10 | Mylar | |
| C812 | 2.2μ | 50 | ±10 | Electrolytic | |
| | (RNB (BP) type) | | | | |
| C813 | 1μ | 50 | +75/−10 | Electrolytic | |
| C814 | 100μ | 35 | +50/−10 | Electrolytic | |
| C815 | 0.01μ | 50 | ±5 | Mylar | |
| C816 | 0.01μ | 50 | ±5 | Mylar | |
| C817 | 0.02μ | 50 | ±5 | Mylar | |
| C818 | 0.001μ | 50 | ±10 | Mylar | |
| C819 | 0.047μ | 50 | +80/−20 | Ceramic | |
| C820 | 0.47 μ | 50 | +75/−10 | Electrolytic | |
| C821 | Not Used | | | | |
| C822 | 0.01μ | 50 | +80/−20 | Ceramic | |
| C823 | 0.01μ | 50 | +80/−20 | Ceramic | |
| C824 | 56p | 50 | ±5 | Ceramic | |
| C825 | 56p | 50 | ±5 | Ceramic | |
| C826 | 220μ | 25 | +50/−20 | Electrolytic | |
| C827 | 4700μ | 10 | ±20 | Electrolytic | |
| | (REtype) | | | | |
| C828 | 10μ | 16 | +50/−10 | Electrolytic | |
| C829 | 3.3μ | 50 | +70/−10 | Electrolytic | |
| C830 | 0.047μ | 50 | +80/−20 | Ceramic | |
| C831 | 0.047μ | 50 | +80/−20 | Ceramic | |
| C901 | 10μ | 16 | +50/−10 | Electrolytic | |
| C902 | 10μ | 16 | +50/−10 | Electrolytic | |
| C903 | 0.022μ | 50 | +80/−20 | Ceramic | |
| C904 | 4.7 μ | 25 | +50/−20 | Electrolytic | |
| C1001 | 0.0068μ | 50 | ±10 | Mylar | |
| C1002 | 0.0068μ | 50 | ±10 | Mylar | |
| C1201 | 0.047μ | 150 | +80/−20 | Ceramic | |
| C1202 | 0.047μ | 150 | +80/−20 | Ceramic | |
| C1203 | 0.047μ | 150 | +80/−20 | Ceramic | |
| C1204 | 0.047μ | 150 | +80/−20 | Ceramic | |
| C1205 | 6800μ | 50 | +50/−10 | Electrolytic | |
| C1206 | 6800μ | 50 | +50/−10 | Electrolytic | |
| C1207 | 0.01μ | 125 | +80/−20 | Ceramic | CA-0951 |
| | (LB or UK type) | | | (UL) | |

| Ref. No. | Value (F) | Voltage (V) | Tolerance (%) | Material | R/S Part. No. |
|---|---|---|---|---|---|
| C1207 | 0.01μ (MY type) | 250 | +80/−20 | Ceramic (C.S.A.) | |
| C1207 | 0.01μ (PME type) | 250 | +80/−20 | Ceramic (Australian) | |
| C1208 | 0.01μ | 50 | +80/−20 | Ceramic | |
| C1209 | 0.01μ | 50 | +80/−20 | Ceramic | |
| C1210 | 0.01μ | 50 | +80/−20 | Ceramic | |
| C1211 | 0.01μ | 50 | +80/−20 | Ceramic | |
| C1212 | 0.01μ (PME type) | 250 | +80/−20 | Ceramic (Australian) | |

## CERAMIC FILTERS

| Ref. No. | Description | R/S Part. No. | Mfr's Part. No. |
|---|---|---|---|
| CF101 | FM Ceramic Filter 10.7 MA 8-A | CA-7536 | P-140030 |
| CF102 | FM Ceramic Filter 10.7 MA 8-A | CA-7536 | P-140030 |
| CF103 | FM Ceramic Filter 10.7 MA 8-A | CA-7536 | P-140030 |

## COILS & TRANSFORMERS

| Ref. No. | Description | R/S Part. No. | Mfr's Part. No. |
|---|---|---|---|
| L1 | FM Ant. Coil (AC-112) | CA-8005 | P-110112 |
| L2 | FM RF Coil (RC-094) | CA-8006 | P-340094 |
| L3 | FM RF Coil (RC-095) | CA-8007 | P-340095 |
| L4 | FM Trap Coil | CA-8009 | P-360042 |
| L5 | FM Osc. Coil (OC-092) | CA-8008 | P-120092 |
| L6 | Micro Inductor (18 μH) | CA-5444 | P-360043 |
| L101 | Micro Inductor (18 μH) | CA-5444 | P-360043 |
| L102 | Micro Inductor (2.2 μH) | C-0708 | P-360096 |
| L103 | Micro Inductor (2.2 μH) | C-0708 | P-360096 |
| L501 | Choke Coil (2 μH) | | P-370009 |
| L502 | Choke Coil (2 μH) | | P-370032 |
| L801 | Micro Inductor (18 μH) | CA-5444 | P-360043 |
| L802 | Micro Inductor (470 μH) | CA-5445 or CB-2347 | P-360097 or P-360033 |
| L901 | Micro Inductor (18 μH) | CA-5444 | P-360043 |
| T1 | FM IFT (7F-060) | CA-8010 | P-140060 |
| T101 | FM IFT (3F-049) | CA-8101 | P-140049 |
| T201 | AM Osc. Coil (OC-093) | CA-8012 | P-120093 |
| T202 | AM IFT (OA-073) | CA-8102 | P-130073 |
| T203 | AM IFT with Ceramic Filter (OA-072) | C-1010 | P-130072 |
| T204 | AM IFT (OA-074) | CA-8013 | P-130074 |
| T205 | AM IFT (OA-075) | CA-8014 | P-130075 |

| Ref. No. | Description | R/S Part. No. | Mfr's Part. No. |
|---|---|---|---|
| T1201 | Power Transformer for Memory Back-up (UL, C.S.A.) | | P-100764 |
| T1201 | Power Transformer for Memory Back-up (Australian) | | P-100766 |
| T1202 | Power Transformer (UL. C.S.A.) | | P-100763 |
| T1202 | Power Transformer (Australian) | | P-100765 |

## CRYSTAL

| Ref. No. | Description | R/S Part. No. | Mfr's Part. No. |
|---|---|---|---|
| X-tal | Crystal HC 18/U 11.52 MHz | MX-2782 | P-390073 |

## DIGITAL DISPLAY PANEL

| Ref. No. | Description | R/S Part. No. | Mfr's Part. No. |
|---|---|---|---|
| | Digital Display Panel | | P-550004 |

## DIODES

| Ref. No. | Description | R/S Part No. | Manufacturer |
|---|---|---|---|
| D1 | Vari Cap 1SV 55 | DX-1309 | HITACHI |
| D2 | Vari Cap 1SV 55 | DX-1309 | HITACHI |
| D3 | Vari Cap 1SV 55 | DX-1309 | HITACHI |
| D4 | Vari Cap 1SV 55 | DX-1309 | HITACHI |
| D101 | ITT-73N | DX-1008 | ITT |
| D102 | ITT-73N | DX-1008 | ITT |
| D103 | ITT-73N | DX-1008 | ITT |
| D104 | ITT-73N | DX-1008 | ITT |
| D105 | ITT-73N | DX-1008 | ITT |
| D106 | VD-1221 | DX-0517 | NEC |
| D201 | Vari Cap KV-1226 | DX-1420 | TOKO |
| D202 | Vari Cap KV-1226 | DX-1420 | TOKO |
| D203 | ITT-73N | DX-1008 | ITT |
| D204 | 1S-188 FM-1 | DX-0241 | SANYO |
| D205 | 1S-188 FM-1 | DX-0241 | SANYO |
| D206 | ITT-73N | DX-1008 | ITT |
| D501 | VD-1221 | DX-0517 | NEC |
| D502 | VD-1221 | DX-0517 | NEC |
| D503 | VD-1121 | DX-0513 | NEC |
| D504 | VD-1121 | DX-0513 | NEC |
| C505 | MV-11Y | DX-1226 | NEC |
| D506 | MV-11Y | DX-1226 | NEC |
| D507 | 1N-60P | DX-0162 | HITACHI |
| D508 | 1N-60P | DX-0162 | HITACHI |
| D509 | 10D-1 or 10E-1 | DX-1039 | INTER-RECTIFIER |
| D510 | 10D-1 or 10E-1 | DX-1039 | INTER-RECTIFIER |
| D511 | 10D-1 or 10E-1 | DX-1039 | INTER-RECTIFIER |
| D512 | 10D-1 or 10E-1 | DX-1039 | INTER-RECTIFIER |
| D601 | SVB10-200 | DX-1115 | UNIZON |
| D602 | SVB10-200 | DX-1115 | UNIZON |
| D603 | RD-13E-B3 | DX-1408 | NEC |
| D604 | RD-33E-B4 | DX-1409 | NEC |
| D605 | RD-33E-B4 | DX-1409 | NEC |
| D606 | 10D-1 or 10E-1 (After Serial No. 11666) | DX-04756 | INTER-RECTIFIER |
| D701 | 10D-1 or 10E-1 | DX-04756 | INTER-RECTIFIER |
| D702 | ITT-73N | DX-1008 | ITT |
| D703 | ITT-73N | DX-1008 | ITT |
| D704 | ITT-73N | DX-1008 | ITT |
| D705 | 10D-1 or 10E-1 | DX-04756 | INTER-RECTIFIER |
| D706 | 10D-1 or 10E-1 | DX-04756 | INTER-RECTIFIER |
| D707 | 10D-1 or 10E-1 | DX-04756 | INTER-RECTIFIER |
| D708 | 10D-1 or 10E-1 | DX-04756 | INTER-RECTIFIER |
| D709 | 10D-1 or 10E-1 | DX-04756 | INTER-RECTIFIER |
| D710 | 10D-1 or 10E-1 (After Serial No. 11666) | DX-04756 | INTER-RECTIFIER |
| D801 | ITT-73N | DX-1008 | ITT |
| D802 | ITT-73N | DX-1008 | ITT |
| D803 | SR-1K-2 or 10E-1 | DX-0475 | UNIZON or INTER-RECTIFIER |
| D804 | RD-6.8 B or WZ-069 | DX-1043 | NEC or JRC |
| D805 | ITT-73N | DX-1008 | ITT |
| D806 | 1S-188 FM-1 | DX-0241 | SANYO |
| D807 | RD-15D B or WZ-150 | DX-1105 | NEC or JRC |
| D808 | RD-3.9E B or WZ-040 | DX-1311 | NEC or JRC |
| D1201 | KBPC 802 | DX-1421 | GI |

## FUSES

| Ref. No. | Description | R/S Part. No. | Mfr's Part. No. |
|---|---|---|---|
| F601 | Fuse 2A/250V Quick Acting | HF-0043 | P-250079 |
| F602 | Fuse 1.5A/250V Quick Acting | HF-0004 | P-250007 |
| F603 | Fuse 1.5A/250V Quick Acting | HF-0004 | P-250007 |
| F1201 | Fuse 6A/125V (UL, C.S.A.) | HF-1116 | P-250098 |
| F1201 | Fuse 3.15A/250V (Australian) | | P-250094 |

## INTEGRATED CIRCUITS (IC'S)

| Ref. No. | Description | R/S Part. No. | Manufacturer |
|---|---|---|---|
| IC101 | LA-1231 NS | MX-4368 | SANYO |
| IC102 | LA-3350 SS | MX-3768 | SANYO |
| IC103 | NJM-4558 DX | MX-3767 | JRC |
| IC201 | HA-1197 | MX-3467 | HITACHI |

| Ref. No. | Description | R/S Part. No. | Manufacturer |
|---|---|---|---|
| IC801 | AN 6821 | MX-4463 | MATSUSHITA |
| IC803 | NJM 4558 DX | MX-3767 | JRC |
| IC805 | MN 6045A | MX-4464 | MATSUSHITA |
| IC901 | LB 1416 | MX-4465 | SANYO |

## LED'S

| Ref. No. | Description | R/S Part. No. | Manufacturer |
|---|---|---|---|
| LED901 | SLP-251B (green) | L-1068 | SANYO |
| LED902 | SLP-251B (green) | L-1068 | SANYO |
| LED903 | SLP-251B (green) | L-1068 | SANYO |
| LED904 | SLP-251B (green) | L-1068 | SANYO |
| LED905 | SLP-251B (green) | L-1068 | SANYO |
| LED906 | SLP-251B (green) | L-1068 | SANYO |
| LED907 | SLP-251B (green) | L-1068 | SANYO |

## LOW PASS FILTERS

| Ref. No. | Description | R/S Part No. | Mfr's Part. No. |
|---|---|---|---|
| LPF101 | Low Pass Filter LPV-20 | CB-0165 | P-510015 |
| LPF102 | Low Pass Filter LPV-20 | CB-0165 | P-510015 |

## REGULATORS

| Ref. No. | Description | R/S Part No. | Manufacturer |
|---|---|---|---|
| IC802 | NJM 78L05A | MX-4162 | JRC |
| IC804 | NJM 78L08A | MX-3873 | JRC |

## RELAYS

| Ref. No. | Description | R/S Part. No. | Mfr's Part. No. |
|---|---|---|---|
| RY701 | Relay L23(M) 2X-7 | R-8116 | P-290022 |
| RY702 | Relay L23(M) 2X-7 | R-8116 | P-290022 |

## RESISTORS

| Ref. No. | Value (Ω) | Wattage (W) | Tolerance (%) | Material | R/S Part. No. |
|---|---|---|---|---|---|
| R1 | 47K | ¼ | ±5 | Carbon | NEE-0340 |
| R2 | 100K | ¼ | ±5 | Carbon | NEE-0371 |
| R3 | 100K | ¼ | ±5 | Carbon | NEE-0371 |
| R4 | 100K | ¼ | ±5 | Carbon | NEE-0371 |
| R5 | 100 | ¼ | ±5 | Carbon | NEE-0132 |
| R6 | 100K | ¼ | ±5 | Carbon | NEE-0371 |
| R7 | 100K | ¼ | ±5 | Carbon | NEE-0371 |
| R8 | 4.7K | ¼ | ±5 | Carbon | NEE-0247 |
| R9 | 22K | ¼ | ±5 | Carbon | NEE-0311 |
| R10 | 1K | ¼ | ±5 | Carbon | NEE-0196 |
| R11 | 10K | ¼ | ±5 | Carbon | NEE-0281 |
| R12 | 1K | ¼ | ±5 | Carbon | NEE-0196 |
| R13 | 100K | ¼ | ±5 | Carbon | NEE-0371 |
| R14 | 100 | ¼ | ±5 | Carbon | NEE-0132 |
| R15 | 220K | ¼ | ±5 | Carbon | NEE-0396 |
| R16 | 1K | ¼ | ±5 | Carbon | NEE-0196 |
| R17 | 100K | ¼ | ±5 | Carbon | NEE-0371 |
| R18 | 8.2K | ¼ | ±5 | Carbon | NEE-0271 |
| R19 | 10K | ¼ | ±5 | Carbon | NEE-0281 |
| R20 | 2.2K | ¼ | ±5 | Carbon | NEE-0216 |
| R21 | 100K | ¼ | ±5 | Carbon | NEE-0371 |
| R101 | 100 | ¼ | ±5 | Carbon | NEE-0132 |
| R102 | 330 | ¼ | ±5 | Carbon | NEE-0159 |
| R103 | 3.9K | ¼ | ±5 | Carbon | NEE-0237 |
| R104 | 10K | ¼ | ±5 | Carbon | NEE-0281 |
| R105 | 1K | ¼ | ±5 | Carbon | NEE-0196 |
| R106 | 330 | ¼ | ±5 | Carbon | NEE-0159 |
| R107 | 100 | ¼ | ±5 | Carbon | NEE-0132 |
| R108 | 100 | ¼ | ±5 | Carbon | NEE-0132 |
| R109 | 330 | ¼ | ±5 | Carbon | NEE-0159 |
| R110 | 2.2K | ¼ | ±5 | Carbon | NEE-0216 |
| R111 | 10K | ¼ | ±5 | Carbon | NEE-0281 |
| R112 | 1K | ¼ | ±5 | Carbon | NEE-0196 |
| R113 | 180 | ¼ | ±5 | Carbon | NEE-0144 |
| R114 | 180 | ¼ | ±5 | Carbon | NEE-0144 |
| R115 | 100 | ¼ | ±5 | Carbon | NEE-0132 |
| R116 | 330 | ¼ | ±5 | Carbon | NEE-0159 |
| R117 | 2.2K | ¼ | ±5 | Carbon | NEE-0216 |
| R118 | 10K | ¼ | ±5 | Carbon | NEE-0281 |
| R119 | 1K | ¼ | ±5 | Carbon | NEE-0196 |
| R120 | 330 | ¼ | ±5 | Carbon | NEE-0159 |
| R121 | 100 | ¼ | ±5 | Carbon | NEE-0132 |
| R122 | 100 | ¼ | ±5 | Carbon | NEE-0132 |
| R123 | 10K | ¼ | ±5 | Carbon | NEE-0281 |
| R124 | 47K | ¼ | ±5 | Carbon | NEE-0340 |
| R125 | 4.7K | ¼ | ±5 | Carbon | NEE-0247 |
| R126 | 1.5K | ¼ | ±5 | Carbon | NEE-0206 |
| R127 | 39K | ¼ | ±5 | Carbon | NEE-0330 |
| R128 | 10K | ¼ | ±5 | Carbon | NEE-0281 |
| R129 | 10K | ¼ | ±5 | Carbon | NEE-0281 |
| R130 | 100 | ¼ | ±5 | Carbon | NEE-0132 |
| R131 | 100K | ¼ | ±5 | Carbon | NEE-0371 |
| R132 | 1K | ¼ | ±5 | Carbon | NEE-0196 |
| R133 | 10K | ¼ | ±5 | Carbon | NEE-0281 |
| R134 | 65K | ¼ | ±5 | Carbon | |
| R135 | 1K | ¼ | ±5 | Carbon | NEE-0196 |
| R136 | 5.6K | ¼ | ±5 | Carbon | NEE-0257 |
| R137 | 3.3K | ¼ | ±5 | Carbon | NEE-0230 |
| R137 | 3K | ¼ | ±5 | Carbon | |
| | (After Serial No. 11666) | | | | |
| R138 | 4.7K | ¼ | ±5 | Carbon | NEE-0247 |
| R139 | 4.7K | ¼ | ±5 | Carbon | NEE-0247 |
| R140 | 36K | ¼ | ±5 | Carbon | NEE-0340 |
| R141 | 1K | ¼ | ±5 | Carbon | NEE-0196 |
| R142 | 47K | ¼ | ±5 | Carbon | NEE-0340 |
| R143 | 100 | ¼ | ±5 | Carbon | NEE-0132 |
| R144 | 10K | ¼ | ±5 | Carbon | NEE-0281 |
| R145 | 100K | ¼ | ±5 | Carbon | NEE-0371 |
| R146 | 100K | ¼ | ±5 | Carbon | NEE-0371 |
| R147 | 10K | ¼ | ±5 | Carbon | NEE-0281 |
| R148 | 1K | ¼ | ±5 | Carbon | NEE-0196 |

| Ref. No. | Value (Ω) | Wattage (W) | Tolerance (%) | Material | R/S Part. No. |
|---|---|---|---|---|---|
| R149 | 1K | ¼ | ±5 | Carbon | NEE-0196 |
| R150 | 100K | ¼ | ±5 | Carbon | NEE-0371 |
| R151 | 100K | ¼ | ±5 | Carbon | NEE-0371 |
| R152 | 18K | ¼ | ±5 | Carbon | NEE-0303 |
| R153 | 18K | ¼ | ±5 | Carbon | NEE-0303 |
| R154 | 2.2K | ¼ | ±5 | Carbon | NEE-0216 |
| R155 | 2.2K | ¼ | ±5 | Carbon | NEE-0216 |
| R156 | 2.2K | ¼ | ±5 | Carbon | NEE-0216 |
| R157 | 220 | ¼ | ±5 | Carbon | NEE-0149 |
| R158 | 2.2K | ¼ | ±5 | Carbon | NEE-0216 |
| R159 | 3.3K | ¼ | ±5 | Carbon | NEE-0230 |
| R160 | 270 | ¼ | ±5 | Carbon | NEE-0155 |
| R161 | 3.3K | ¼ | ±5 | Carbon | NEE-0230 |
| R162 | 560 | ¼ | ±5 | Carbon | NEE-0176 |
| R163 | 47K | ¼ | ±5 | Carbon | NEE-0340 |
| R164 | 39K | ¼ | ±5 | Carbon | NEE-0330 |
| R165 | 1K | ¼ | ±5 | Carbon | NEE-0196 |
| R166 | 8.2K | ¼ | ±5 | Carbon | NEE-0271 |
| R167 | 10K | ¼ | ±5 | Carbon | NEE-0281 |
| R168 | 22K | ¼ | ±5 | Carbon | NEE-0311 |
| R169 | 39K | ¼ | ±5 | Carbon | NEE-0330 |
| R170 | 56K | ¼ | ±5 | Carbon | NEE-0345 |
| R171 | 10K | ¼ | ±5 | Carbon | NEE-0281 |
| R172 | 47K | ¼ | ±5 | Carbon | NEE-0340 |
| R173 | 47K | ¼ | ±5 | Carbon | NEE-0340 |
| R174 | 100K | ¼ | ±5 | Carbon | NEE-0371 |
| R175 | 10K | ¼ | ±5 | Carbon | NEE-0281 |
| R176 | 1K | ¼ | ±5 | Carbon | NEE-0196 |
| R177 | 330 | ¼ | ±5 | Carbon | NEE-0159 |
| R201 | 47K | ¼ | ±5 | Carbon | NEE-0340 |
| R202 | 47K | ¼ | ±5 | Carbon | NEE-0340 |
| R203 | 33K | ¼ | ±5 | Carbon | NEE-0324 |
| R204 | 10K | ¼ | ±5 | Carbon | NEE-0281 |
| R205 | 100K | ¼ | ±5 | Carbon | NEE-0371 |
| R206 | 100 | ¼ | ±5 | Carbon | NEE-0132 |
| R207 | 1K | ¼ | ±5 | Carbon | NEE-0196 |
| R208 | 82K | ¼ | ±5 | Carbon | NEE-0360 |
| R209 | 5.6K | ¼ | ±5 | Carbon | NEE-0257 |
| R210 | 1.5K | ¼ | ±5 | Carbon | NEE-0206 |
| R211 | 150 | ¼ | ±5 | Carbon | NEE-0142 |
| R212 | 10K | ¼ | ±5 | Carbon | NEE-0281 |
| R213 | 10K | ¼ | ±5 | Carbon | NEE-0281 |
| R214 | 150 | ¼ | ±5 | Carbon | NEE-0142 |
| R215 | 820 | ¼ | ±5 | Carbon | NEE-0187 |
| R216 | 820 | ¼ | ±5 | Carbon | NEE-0187 |
| R217 | 10K | ¼ | ±5 | Carbon | NEE-0281 |
| R218 | 1K | ¼ | ±5 | Carbon | NEE-0196 |
| R219 | 10K | ¼ | ±5 | Carbon | NEE-0281 |
| R220 | 6.8K | ¼ | ±5 | Carbon | NEE-0262 |
| R221 | 4.7K | ¼ | ±5 | Carbon | NEE-0247 |
| R222 | 1.5M | ¼ | ±5 | Carbon | NEE-0450 |
| R223 | 1K | ¼ | ±5 | Carbon | NEE-0196 |
| R224 | 47K | ¼ | ±5 | Carbon | NEE-0340 |
| R225 | 10K | ¼ | ±5 | Carbon | NEE-0281 |
| R226 | 100K | ¼ | ±5 | Carbon | NEE-0371 |
| R227 | 10K | ¼ | ±5 | Carbon | NEE-0281 |
| R228 | 1K | ¼ | ±5 | Carbon | NEE-0196 |

| Ref. No. | Value (Ω) | Wattage (W) | Tolerance (%) | Material | R/S Part. No. |
|---|---|---|---|---|---|
| R229 | 820 | ¼ | ±5 | Carbon | NEE-0187 |
| R230 | 1K | ¼ | ±5 | Carbon | NEE-0196 |
| R231 | 1K | ¼ | ±5 | Carbon | NEE-0196 |
| R232 | 15K | ¼ | ±5 | Carbon | NEE-0297 |
| R233 | 15K | ¼ | ±5 | Carbon | NEE-0297 |
| R234 | 100 | ¼ | ±5 | Carbon | NEE-0132 |
| R235 | 1K | ¼ | ±5 | Carbon | NEE-0196 |
| R236 | 220K | ¼ | ±5 | Carbon | NEE-0396 |
| R237 | 27K | ¼ | ±5 | Carbon | NEE-0316 |
| R238 | 47K | ¼ | ±5 | Carbon | NEE-0340 |
| R239 | 10K | ¼ | ±5 | Carbon | NEE-0281 |
| R240 | 100K | ¼ | ±5 | Carbon | NEE-0371 |
| R241 | 390K | ¼ | ±5 | Carbon | NEE-0414 |
| R242 | 22K | ¼ | ±5 | Carbon | NEE-0311 |
| R243 | 10K | ¼ | ±5 | Carbon | NEE-0281 |
| R301/R302 | 56K | ¼ | ±5 | Carbon | NEE-0345 |
| R303/R304 | 470 | ¼ | ±5 | Carbon | NEE-0169 |
| R305/R306 | 390K | ¼ | ±5 | Carbon | NEE-0414 |
| R307/R308 | 22K | ¼ | ±5 | Carbon | NEE-0311 |
| R309/R310 | 100K | ¼ | ±5 | Carbon | NEE-0371 |
| R311/R312 | 620 | ¼ | ±5 | Carbon | |
| R313/R314 | 33K | ¼ | ±5 | Carbon | NEE-0324 |
| R315/R316 | 390K | ¼ | ±5 | Carbon | NEE-0414 |
| R317/R318 | 15K | ¼ | ±5 | Carbon | NEE-0297 |
| R319/R320 | 270 | ¼ | ±5 | Carbon | NEE-0155 |
| R321/R322 | 10K | ¼ | ±5 | Carbon | NEE-0281 |
| R323/R324 | 560 | ¼ | ±5 | Carbon | NEE-0176 |
| R325/R326 | 4.7K | ¼ | ±5 | Carbon | NEE-0247 |
| R327/R328 | 100 | ¼ | ±5 | Carbon | NEE-0132 |
| R329/R330 | 47K | ¼ | ±5 | Carbon | NEE-0340 |
| R331/R332 | 100 | ¼ | ±5 | Carbon | NEE-0132 |
| R333/R334 | 4.7K | ¼ | ±5 | Carbon | NEE-0247 |
| R335/R336 | 4.7K | ¼ | ±5 | Carbon | NEE-0247 |
| R337/R338 | 220K | ¼ | ±5 | Carbon | NEE-0396 |
| R339/R340 | 220K | ¼ | ±5 | Carbon | NEE-0396 |
| R401/R402 | 220K | ¼ | ±5 | Carbon | NEE-0396 |
| R403/R404 | 100K | ¼ | ±5 | Carbon | NEE-0371 |
| R405/R406 | 4.7K | ¼ | ±5 | Carbon | NEE-0247 |
| R407/R408 | 1K | ¼ | ±5 | Carbon | NEE-0196 |
| R409/R410 | 3.9K | ¼ | ±5 | Carbon | NEE-0237 |
| R411/R412 | 56K | ¼ | ±5 | Carbon | NEE-0345 |
| R413/R414 | 2.2K | ¼ | ±5 | Carbon | NEE-0216 |
| R415/R416 | 100K | ¼ | ±5 | Carbon | NEE-0371 |
| R417/R418 | 100K | ¼ | ±5 | Carbon | NEE-0371 |
| R419/R420 | 100K | ¼ | ±5 | Carbon | NEE-0371 |
| R421/R422 | 1M | ¼ | ±5 | Carbon | NEE-0445 |
| R423/R424 | 1.2K | ¼ | ±5 | Carbon | NEE-0199 |
| R425/R426 | 330K | ¼ | ±5 | Carbon | NEE-0410 |
| R427/R428 | 680 | ¼ | ±5 | Carbon | NEE-0183 |
| R429/R430 | 4.7K | ¼ | ±5 | Carbon | NEE-0247 |
| R431/R432 | 22K | ¼ | ±5 | Carbon | NEE-0311 |
| R433/R434 | 39K | ¼ | ±5 | Carbon | NEE-0330 |
| R435/R436 | 2.7K | ¼ | ±5 | Carbon | NEE-0224 |
| R437/R438 | 10K | ¼ | ±5 | Carbon | NEE-0281 |
| R439/R440 | 1.8K | ¼ | ±5 | Carbon | NEE-0210 |
| R441/R442 | 1K | ¼ | ±5 | Carbon | NEE-0196 |
| R443/R444 | 220K | ¼ | ±5 | Carbon | NEE-0396 |

| Ref. No. | Value (Ω) | Wattage (W) | Tolerance (%) | Material | R/S Part. No. |
|---|---|---|---|---|---|
| R445/R446 | 4.7K | ¼ | ±5 | Carbon | NEE-0247 |
| R447/R448 | 15K | ¼ | ±5 | Carbon | NEE-0297 |
| R449/R450 | 100K | ¼ | ±5 | Carbon | NEE-0371 |
| R451/R452 | Not Used | | | | |
| R453/R454 | 22K | ¼ | ±5 | Carbon | NEE-0311 |
| R455/R456 | 680K | ¼ | ±5 | Carbon | NEE-0433 |
| R457/R458 | 15K | ¼ | ±5 | Carbon | NEE-0297 |
| R459/R460 | 100K | ¼ | ±5 | Carbon | NEE-0371 |
| R461/R462 | 4.7M | ¼ | ±5 | Carbon | |
| R463/R464 | 6.8K | ¼ | ±5 | Carbon | NEE-0262 |
| R465/R466 | 1K | ¼ | ±5 | Carbon | NEE-0196 |
| R467/R468 | 4.7K | ¼ | ±5 | Carbon | NEE-0247 |
| R469/R470 | 150K | ¼ | ±5 | Carbon | NEE-0384 |
| R471/R472 | 47K | ¼ | ±5 | Carbon | NEE-0340 |
| R473/R474 | 100K | ¼ | ±5 | Carbon | NEE-0371 |
| R475/R476 | 4.7K | ¼ | ±5 | Carbon | NEE-0247 |
| R477/R478 | 4.7K | ¼ | ±5 | Carbon | NEE-0247 |
| R479/R480 | 470K | ¼ | ±5 | Carbon | NEE-0423 |
| R481/R482 | 150 | ½ | ±5 | Carbon | NEF-0142 |
| R483/R484 | 470 | ¼ | ±5 | Carbon | NEE-0169 |
| R501/R502 | 220K | ½ | ±5 | Carbon | NEF-0396 |
| R503/R504 | 2.2K | ½ | ±5 | Carbon | NEF-0216 |
| R505/R506 | 47K | ½ | ±5 | Carbon | NEF-0340 |
| R507/R508 | 330 | ½ | ±5 | Carbon | NEF-0159 |
| R509/R510 | 2.7K | ½ | ±5 | Carbon | NEF-0224 |
| R511/R512 | 2.7K | ½ | ±5 | Carbon | NEF-0224 |
| R513/R514 | 56K | ½ | ±5 | Carbon | NEF-0345 |
| R515/R516 | 2K | ½ | ±5 | Carbon | |
| R517/R518 | 47K | ½ | ±5 | Carbon | NEF-0340 |
| R519/R520 | 68 | ½ | ±5 | Carbon | NEF-0111 |
| R521/R522 | 6.8K | 1 | ±5 | Metal Oxide | NEG-0262 |
| R523/R524 | 100 (UL, Australian) | ½ | ±5 | Carbon | NEF-0132 |
| R523/R524 | 100 (C.S.A.) | 1 | ±5 | Metal Oxide | NEG-0132 |
| R525/R526 | 68 | ½ | ±5 | Carbon | NEF-0111 |
| R527/R528 | 100 | 1 | ±5 | Metal Oxide | NEG-0132 |
| R529/R530 | 100 | 1 | ±5 | Metal Oxide | NEG-0132 |
| R531/R532 | 100 (UL, Australian) | ½ | ±5 | Carbon | NEF-0132 |
| R531/R532 | 100 (C.S.A.) | 1 | ±5 | Metal Oxide | NEG-0132 |
| R533/R534 | 100 (UL, Australian) | ½ | ±5 | Carbon | NEF-0132 |
| R533/R534 | 100 (C.S.A.) | 1 | ±5 | Metal Oxide | NEG-0132 |
| R535/R536 | 4.7 (UL, Australian) | ½ | ±5 | Carbon | NEF-0047 |
| R535/R536 | 4.7 (C.S.A.) | 1 | ±5 | Metal Oxide | NEG-0047 |
| R537/R538 | 4.7 (UL, Australian) | ½ | ±5 | Carbon | NEF-0047 |
| R537/R538 | 4.7 (C.S.A.) | 1 | ±5 | Metal Oxide | NEG-0047 |
| R539/R540 | 0.5 | 5 | ±5 | Cement | |
| R541/R542 | 0.5 | 5 | ±5 | Cement | |
| R543/R544 | 6.8K | ½ | ±5 | Carbon | NEF-0262 |
| R545/R546 | 1K | ½ | ±5 | Carbon | NEF-0196 |
| R547/R548 | 1K | ½ | ±5 | Carbon | NEF-0196 |
| R549/R550 | 10 | 2 | ±5 | Metal Oxide | NEH-0063 |
| R551/R552 | 4.7 | 2 | ±5 | Metal Oxide | NEH-0047 |
| R601 | 220 | ½ | ±5 | Carbon | NEF-0149 |

| Ref. No. | Value (Ω) | Wattage (W) | Tolerance (%) | Material | R/S Part. No. |
|---|---|---|---|---|---|
| R602 | 22 | 1 | ±5 | Metal Oxide | NEG-0078 |
| R602 | 18 (After Serial No. 11666) | 1 | ±5 | Metal Oxide | |
| R603 | 820 | ½ | ±5 | Carbon | NEF-0187 |
| R604 | 820 | ½ | ±5 | Carbon | NEF-0187 |
| R605 | 100 | ½ | ±5 | Carbon | NEF-0132 |
| R606 | 10K | ½ | ±5 | Carbon | NEF-0281 |
| R607 | 1.5K | ½ | ±5 | Carbon | NEF-0206 |
| R608 | 1.5K | ½ | ±5 | Carbon | NEF-0206 |
| R609 | 100 | ½ | ±5 | Carbon | NEF-0132 |
| R610 | 100 | ½ | ±5 | Carbon | NEF-0132 |
| R611 | 120 | 1 | ±5 | Metal Oxide | NEG-0136 |
| R612 | 120 | 1 | ±5 | Metal Oxide | NEG-0136 |
| R613 | 150 | 1 | ±5 | Metal Oxide | NEG-0142 |
| R614 | 150 | 1 | ±5 | Metal Oxide | NEG-0142 |
| R615 | 4.7K | 1 | ±5 | Metal Oxide | NEG-0247 |
| R616 | 1K | ½ | ±5 | Carbon | NEF-0196 |
| R617 | 470 | ½ | ±5 | Carbon | NEF-0169 |
| R618 | 470 | ½ | ±5 | Carbon | NEF-0169 |
| R619 | 100 | 2 | ±5 | Metal Oxide | NEH-0132 |
| R620 | 1K | ½ | ±5 | Carbon | NEF-0196 |
| R621 | 2.7K | ½ | ±5 | Carbon | NEF-0224 |
| R622 | 47K (After Serial No. 11666) | ½ | ±5 | Carbon | NEF-0340 |
| R623 | 56K (After Serial No.11666) | ½ | ±5 | Carbon | NEF-0345 |
| R701 | 10 | ¼ | ±5 | Carbon | NEE-0063 |
| R702 | 270K | ¼ | ±5 | Carbon | NEE-0402 |
| R703 | 47 | ¼ | ±5 | Carbon | NEE-0099 |
| R704 | 22 | ¼ | ±5 | Carbon | NEE-0078 |
| R705 | 100 | ¼ | ±5 | Carbon | NEE-0132 |
| R706 | 390K | ¼ | ±5 | Carbon | NEE-0414 |
| R707 | 39K | ¼ | ±5 | Carbon | NEE-0330 |
| R708 | 10K (After Serial No. 11666) | ¼ | ±5 | Carbon | NEE-0281 |
| R801 | 22K | ¼ | ±5 | Carbon | NEE-0311 |
| R802 | 3.3K | ¼ | ±5 | Carbon | NEE-0230 |
| R803 | 100K | ¼ | ±5 | Carbon | NEE-0371 |
| R804 | 10K | ¼ | ±5 | Carbon | NEE-0281 |
| R805 | 47K | ¼ | ±5 | Carbon | NEE-0340 |
| R806 | 150K | ¼ | ±5 | Carbon | NEE-0384 |
| R807 | 10K | ¼ | ±5 | Carbon | NEE-0281 |
| R808 | 2.7K | ¼ | ±5 | Carbon | NEE-0224 |
| R809 | 33 | ¼ | ±5 | Carbon | |
| R810 | 100K | ¼ | ±5 | Carbon | NEE-0371 |
| R811 | 1K | ¼ | ±5 | Carbon | NEE-0196 |
| R812 | 3.3K | ¼ | ±5 | Carbon | NEE-0230 |
| R813 | 22K | ¼ | ±5 | Carbon | NEE-0311 |
| R814 | 100K | ¼ | ±5 | Carbon | NEE-0371 |
| R815 | 6.8K | ¼ | ±5 | Carbon | NEE-0262 |
| R816 | 470 | ¼ | ±5 | Carbon | NEE-0169 |
| R817 | 10K | ¼ | ±5 | Carbon | NEE-0281 |
| R818 | 10K | ¼ | ±5 | Carbon | NEE-0281 |
| R819 | 4.7K | ¼ | ±5 | Carbon | NEE-0247 |
| R820 | 4.7K | ¼ | ±5 | Carbon | NEE-0247 |
| R821 | 5.6K | ¼ | ±5 | Carbon | NEE-0257 |
| R822 | 2.2K | ¼ | ±5 | Carbon | NEE-0216 |
| R823 | 39K | ¼ | ±5 | Carbon | NEE-0330 |

| Ref. No. | Value (Ω) | Wattage (W) | Tolerance (%) | Material | R/S Part No. |
|---|---|---|---|---|---|
| R824 | Not Used | | | | |
| R825 | Not Used | | | | |
| R826 | 1K | ¼ | ±5 | Carbon | NEE-0196 |
| R827 | 100K | ¼ | ±5 | Carbon | NEE-0371 |
| R828 | 100K | ¼ | ±5 | Carbon | NEE-0371 |
| R829 | 100K | ¼ | ±5 | Carbon | NEE-0371 |
| R830 | 100K | ¼ | ±5 | Carbon | NEE-0371 |
| R831 | 100K | ¼ | ±5 | Carbon | NEE-0371 |
| R832 | 100K | ¼ | ±5 | Carbon | NEE-0371 |
| R833 | 100K | ¼ | ±5 | Carbon | NEE-0371 |
| R834 | 100K | ¼ | ±5 | Carbon | NEE-0371 |
| R835 | 100K | ¼ | ±5 | Carbon | NEE-0371 |
| R836 | 100K | ¼ | ±5 | Carbon | NEE-0371 |
| R837 | 100K | ¼ | ±5 | Carbon | NEE-0371 |
| R838 | 100K | ¼ | ±5 | Carbon | NEE-0371 |
| R839 | 100K | ¼ | ±5 | Carbon | NEE-0371 |
| R840 | Not Used | | | | |
| R841 | Not Used | | | | |
| R842 | 10K | ¼ | ±5 | Carbon | NEE-0281 |
| R843 | 470 | ¼ | ±5 | Carbon | NEE-0169 |
| R844 | 1.5K | ¼ | ±5 | Carbon | NEE-0206 |
| R845 | 7.5K | ¼ | ±5 | Carbon | |
| R846 | 1K | ¼ | ±5 | Carbon | NEE-0196 |
| R847 | 100K | ¼ | ±5 | Carbon | NEE-0371 |
| R848 | 100K | ¼ | ±5 | Carbon | NEE-0371 |
| R849 | 100K | ¼ | ±5 | Carbon | NEE-0371 |
| R850 | 100K | ¼ | ±5 | Carbon | NEE-0371 |
| R851 | 100K | ¼ | ±5 | Carbon | NEE-0371 |
| R852 | 100K | ¼ | ±5 | Carbon | NEE-0371 |
| R853 | 100K | ¼ | ±5 | Carbon | NEE-0371 |
| R854 | 100K | ¼ | ±5 | Carbon | NEE-0371 |
| R855 | 100K | ¼ | ±5 | Carbon | NEE-0371 |
| R856 | 100K | ¼ | ±5 | Carbon | NEE-0371 |
| R857 | 100K | ¼ | ±5 | Carbon | NEE-0371 |
| R858 | 330 | ¼ | ±5 | Carbon | NEE-0159 |
| R901 | 15K | ¼ | ±5 | Carbon | NEE-0297 |
| R902 | 10K | ¼ | ±5 | Carbon | NEE-0281 |
| R903 | 150K | ¼ | ±5 | Carbon | NEE-0384 |
| R904 | 100K | ¼ | ±5 | Carbon | NEE-0371 |
| R905 | 680 | ¼ | ±5 | Carbon | NEE-0183 |
| R1001 | 10K | ¼ | ±5 | Carbon | NEE-0281 |
| R1101 | 560 | 1 | ±5 | Metal Oxide | NEG-0176 |
| R1102 | 560 | 1 | ±5 | Metal Oxide | NEG-0176 |
| R1201 | 2.2M | ½ | ±5 | Carbon (UL, C.S.A.) | NEF-0454 |

## SCR

| Ref. No. | Description | R/S Part No. | Manufacturer |
|---|---|---|---|
| SCR601 | 03P-1M | DX-1407 | NEC |

## SWITCHES

| Ref. No. | Description | R/S Part No. | Mfr's Part. No. |
|---|---|---|---|
| Ssl-Ss4 | SELECTOR Switch | S-1432 | P-180471 |
| | TAPE MONITOR Switch | S-1433 | P-180461 |
| | TAPE DUBBING Switch | S-1433 | P-180461 |
| | Push Switch | S-7503 | P-180470 |
| | (HI- MPX FILTER/HIGH FILTER/ LOW FILTER/MONO/LOUDNESS) | | |
| Ps1-Ps2 | Push Switch | | |
| | (SPEAKERS A/B/POWER) | | |
| | (UL, C.S.A.) | | P-180469 |
| | Push Switch | | |
| | (SPEAKERS A/B/POWER) | | |
| | (Australian) | | P-180478 |
| | Keyboard Switch | S-0980 | P-180399 |

## THERMAL PROTECTOR

| Ref. No. | Description | R/S Part No. | Mfr's Part. No. |
|---|---|---|---|
| | Thermal Protector 100° C UI-2 | | P-290025 |

## TRANSISTORS

| Ref. No. | Description | Manufacturer |
|---|---|---|
| TR1 | 3SK 45 (B) | HITACHI |
| TR2 | 2SC 1674 (L, K) or 2SC2786 (L) | NEC |
| TR3 | 2SK 104 (H) | NEC |
| TR4 | 2SC1674 (L,K) or 2SC2786 (L) | NEC |
| TR101 | 2SC 1675 (L, K) or 2SC2787 (L) | NEC |
| TR102 | 2SC 1675 (L, K) or 2SC2787 (L) | NEC |
| TR103 | 2SC1675 (L, K) or 2SC2787 (L) | NEC |
| TR104 | 2SC1675 (L, K) or 2SC2787 (L) | NEC |
| TR105 | 2SC945A (P) | NEC |
| TR106 | 2SC945A (P) | NEC |
| TR107 | 2SC945A (P) | NEC |
| TR108 | 2SC945A (P) | NEC |
| TR109 | 2SC945A (P) | NEC |
| TR110 | 2SC945A (P) | NEC |
| TR201 | 2SK104 (H) | NEC |
| TR202 | 2SC945A (P) | NEC |
| TR203 | 2SC945A (P) | NEC |
| TR204 | 2SC1675 (L, K) or 2SC2787 (L) | NEC |
| TR205 | 2SC1675 (L, K) or 2SC2787 (L) | NEC |
| TR206 | 2SC945A (P) | NEC |
| TR207 | 2SC945A (P) | NEC |
| TR208 | 2SA733A (P) | NEC |
| TR209 | 2SC945A (P) | NEC |
| TR210 | 2SC945A (P) | NEC |
| TR211 | 2SC945A (P) | NEC |
| TR301/TR302 | 2SC1222 (1) (E, U) | NEC |
| TR303/TR304 | 2SC1222 (1) (E, U) | NEC |
| TR305/TR306 | 2SA750 (1) (E, U) | NEC |
| TR307/TR308 | 2SC1222 (1) (E, U) | NEC |
| TR401/TR402 | 2SC1222 (E, U) | NEC |
| TR403/TR404 | 2SA750 (E, U) | NEC |
| TR405/TR406 | 2SA750 (E, U) | NEC |

| Ref. No. | Description | Manufacturer |
|---|---|---|
| TR407/TR408 | 2SC1222 (E, U) | NEC |
| TR409/TR410 | 2SC1222 (E, U) | NEC |
| TR411/TR412 | 2SC1222 (U) | NEC |
| TR413/TR414 | 2SC1222 (E, U) | NEC |
| TR501/TR502 | 2SA992 (E) | NEC |
| TR503/TR504 | 2SA992 (E) | NEC |
| TR505/TR506 | 2SA992 (E) | NEC |
| TR507/TR508 | 2SA915 (K) | NEC |
| TR509/TR510 | 2SC1940 (K) | NEC |
| TR511/TR512 | 2SC1940 (K) | NEC |
| TR513/TR514 | 2SC2275 (Q) | NEC |
| TR515/TR516 | 2SA985 (Q) | NEC |
| TR517/TR518 | 2SD1110 (2) (R, Q) | NEC |
| TR519/TR520 | 2SB849 (2) (R, Q) | NEC |
| TR521/TR522 | 2SA992 (E) | NEC |
| TR601 | 2SD330 (D, E) | SANYO |
| TR602 | 2SD325 (D, E) | SANYO |
| TR603 | 2SB511 (D, E) | SANYO |
| TR604 | 2SC945A (P) | NEC |
| TR701 | 2SC945A (P) | NEC |
| TR702 | 2SC945A (P) | NEC |
| TR703 | 2SC945A (P) | NEC |
| TR704 | 2SC945A (P) | NEC |
| TR705 | 2SC945A (P) | NEC |
| TR706 | 2SC945A (P) (After Serial No. 11666) | |
| TR801 | 2SC945A (P) | NEC |
| TR802 | 2SA733A (P) | NEC |
| TR803 | 2SC945A (P) | NEC |
| TR804 | 2SC945A (P) | NEC |
| TR805 | 2SA733A (P) | NEC |
| TR806 | 2SA733A (P) | NEC |
| TR807 | 2SA733A (P) | NEC |
| TR808 | 2SA733A (P) | NEC |
| TR809 | 2SA733A (P) | NEC |
| TR810 | 2SA733A (P) | NEC |
| TR811 | 2SA733A (P) | NEC |
| TR812 | 2SA733A (P) | NEC |
| TR813 | 2SA733A (P) | NEC |
| TR814 | 2SA733A (P) | NEC |
| TR815 | 2SA733A (P) | NEC |
| TR816 | 2SA733A (P) | NEC |
| TR817 | 2SA733A (P) | NEC |
| TR901 | 2SC945A (P) | NEC |

## VARIABLE CAPACITORS

| Ref. No. | Description | R/S Part No. | Mfr's Part. No. |
|---|---|---|---|
| TC1 | Trimmer TRC-1T8 x 10 | C-1110 | P-160019 |
| TC2 | Trimmer TRC-1T8 x 10 | C-1110 | P-160019 |
| TC3 | Trimmer TRC-1T8 x 10 | C-1110 | P-160019 |
| TC4 | Trimmer TRC-1T8 x 10 | C-1110 | P-160019 |
| TC201 | Trimmer TRC-1T8 x 10 | C-1110 | P-160019 |

## VARIABLE RESISTORS

| Ref. No. | Description | R/S Part No. | Mfr's Part. No. |
|---|---|---|---|
| VR101 | Trimmer 47K Ω B | P-6551 | P-170373 or P-170442 or P-171228 |
| VR102 | Trimmer 10K Ω B | P-6549 | P-170439 or P-171224 or P-170371 |
| VR103 | Trimmer 1K Ω B | | P-170367 or P-170433 or P-171218 |
| VR104 | Trimmer 4.7K Ω B | P-6550 | P-170370 or P-170437 or P-171222 |
| VR201 | Trimmer 2.2K Ω B | P-6556 | P-170368 or P-170435 or P-171220 |
| VR202 | Trimmer 100K Ω B | P-6578 | P-170374 or P-170444 or P-171230 |
| VR401/VR402 | VOLUME Control 2 BL 100K Ω x 2 (plus 1Z 100K Ω x 2) | P-7120 | P-171306 |
| VR403/VR404 | BALANCE Control 1Z 100K Ω x 2 (plus 2 BL 100K Ω x 2) | P-7120 | P-171306 |
| VR405/VR406 | TREBLE Control 61Z 100K Ω x 2) | P-7118 | P-171308 |
| VR407/VR408 | BASS Control 61Z 100K Ω x 2 | P-7118 | P-171308 |
| VR409/VR410 | MIDRANGE Control 1 KB 200K Ω x 2 | P-7119 | P-171307 |
| VR501 | Trimmer 220 Ω B | P-6627 | P-171035 |
| VR502 | Trimmer 220 Ω B | P-6627 | P-171035 |
| VR901 | Trimmer 10K Ω B | P-6628 | P-170534 |

# (30) EXPLODED VIEW PARTS LIST

| Ref. No. | Description | R/S Part No. | Mfr's Part. No. |
|---|---|---|---|
| 1 | Switch Assembly P.C.B. | | U-23167 |
| 2 | Speaker Switch Assembly P.C.B. | X-8550 | U-23168 |
| 3 | Tone Amp Assembly P.C.B. | X-8551 | U-14134 |
| 4 | Function Assembly P.C.B. | X-8552 | U-23166 |
| 5 | Pre Amp Assembly P.C.B. | X-8553 | U-14133 |
| 6 | Power Supply Assembly P.C.B. | X-8554 | U-17083 |
| 7 | Main Amp Assembly P.C.B. | X-8555 | U-16108 |
| 8 | Power Transistor P.C.B. (868) | | P-200868 |
| 9 | Power Transistor P.C.B. (869) | | P-200869 |
| 10 | Heat Sink | | P-412221 |
| 11 | Main Amp P.C.B. Holder (R) | | P-412229 |
| 12 | Main Amp P.C.B. Holder (L) | | P-412230 |
| 13 | Tuner Assembly P.C.B. | X-8556 | U-12054 |
| 14 | Controller Assembly P.C.B. | X-8557 | U-28011 |
| 15 | Controller Ass'y P.C.B. Bracket (R) | | P-412224 |
| 16 | Controller Ass'y P.C.B. Bracket (L) | | P-412225 |
| 17 | Display Assembly P.C.B. | X-8558 | U-28012 |
| 18 | Keyboard Switch P.C.B. | | U-28013 |
| 19 | LED Bracket | | P-412267 |
| 20 | Tuning P.C.B. (867) | | U-28014 |
| 21 | Front Chassis | | P-400295 |
| 22 | Dial Base Bracket | | P-412237 |
| 23 | Dial Base | | P-412238 |
| 24 | Dial Side (R) | D-1331 | P-412233 |
| 25 | Dial Side (L) | D-1332 | P-412234 |
| 26 | Digital Window | D-5430 | P-640263 |
| 27 | Push Switch | S-7505 | P-180475 |
| 28 | Headphone Jack | J-0919 | P-190125 |
| 29 | LED | L-1124 | |
| 30 | LED Holder | | P-680230 |
| 31 | Line Pass Capacitor (UK535 or LB type) (UL) | | |
| 31 | Line Pass Capacitor (MY type) (C.S.A.) | | P-220044 |
| 31 | Line Pass Capacitor (PME 271M type) (Australian) | | P-220022 |
| 32 | Capacitor Cover (UL) | | P-610466 |
| 32 | Capacitor Cover (C.S.A.) | | P-610670 |
| 33 | Side Bracket (R) | | P-412231 |
| 34 | Side Bracket (L) | | P-412232 |
| 35 | Side Chassis (R) | | P-400296 |
| 36 | Side Chassis (L) | | P-400297 |
| 37 | Center Chassis | | P-400298 |
| 38 | Main Amp Chassis | | P-400294 |
| 39 | Transformer Bracket (A) | | P-412235 |
| 40 | Reinforce Bracket | | P-412226 |
| 41 | Heat Sink Bracket | | P-412227 |
| 42 | Transformer Bracket (B) | | P-412223 |
| 43 | Ground Screw | HD-1478 | P-420300 |
| 44 | Speaker Terminal | J-6603 | |
| | (8P Screw 2PRCA) | J-6434 | P-190138 |
| 45 | AC Outlet (UL, Australian) | | P-190098 or P-190157 |
| 45 | AC Outlet (C.S.A.) | | P-190324 or P-190157 |

| Ref. No. | Description | R/S Part No. | Mfr's Part. No. |
|---|---|---|---|
| 46 | Fuse Holder (UL) | F-1013 | P-260011 |
| 46 | Fuse Holder (C.S.A.) | | P-260013 |
| 46 | Fuse Holder (Australian) | | P-260015 |
| 47 | AC Cord (UL, C.S.A.) | | P-310115 |
| 47 | AC Cord (Australian) | | P-310041 |
| 48 | Cord Strain Relief (UL, C.S.A.) | HB-0705 | P-480010 |
| 48 | Cord Strain Relief (Australian) | | P-480010 or P-480165 |
| 49 | AM Antenna Coil | CA-5446 | P-110134 |
| 50 | Back Panel (UL) | Z-5682 | P-412239 |
| 50 | Back Panel (C.S.A.) | | P-412240 |
| 50 | Back Panel (Australian) | | P-412241 |
| 51 | Antenna Terminal (4P) | J-4527 | P-320190 |
| 52 | Electrolytic Capacitor | | P-220050 |
| 53 | Rectifier | | |
| 54 | Ground Lug | | P-320284 |
| 55 | Thermal Protector | HH-0329 | P-290025 |
| 56 | Protector Spring | RB-6570 | P-411701 |
| 57 | Wire Stay | | P-450073 |
| 58 | Antenna Holder | HB-2890 | P-410856 |
| 59 | Shield Plate Ass'y | | P-412332 |
| | Consisting of Shield Plate (A) | | P-412292 |
| | Shield Plate (B) | | P-412331 |
| 60 | Front Panel | Z-5684 | P-700472 |
| 61 | Front Window | | P-640264 |
| 62 | Knob Guide (A) | | P-610757 |
| 63 | Switch Cover | | P-610768 |
| 64 | Knob Guide | | P-610767 |
| 65 | Tuning Base | | P-610760 |
| 66 | Blind Sheet for Lever Switch | | P-660167 |
| 67 | Knob for Tuning (463) | | P-650463 |
| 68 | Knob for Memory Switch (464) | K-4279 | P-650464 |
| 69 | Knob for Tone Control (472) | K-4280 | P-650472 |
| 70 | Knob for Lever Switch (473) | K-4281 | P-650473 |
| 71 | Inner Knob for Volume (474) | K-4282 | P-650474 |
| 72 | Outer Knob for Volume (475) | K-4283 | P-650475 |
| 73 | Knob for Push Switch (478) | K-4284 | P-650478 |
| 74 | Coil Spring for Memory & Tuning Knob | RB-6571 | P-440163 |
| 75 | Power Transformer (T1202) (UL, C.S.A.) | TA-0832 | P-100763 |
| 75 | Power Transformer (T1202) (Australian) | | P-100765 |
| 76 | Power Transformer (T1201) (UL, C.S.A.) | TA-0833 | P-100764 |
| 76 | Power Transformer (T1201) (Australian) | | P-100766 |
| 77 | Sheet for Display (B) | | P-480299 |
| | Cabinet Assembly | Z-5683 | P-600186 |
| 78 | Consisting of Side Board (R) | | P-630138 |
| 79 | Side Board (L) | | P-630139 |
| 80 | Top Cover | | P-600187 |
| 81 | Ground Plate | | P-412249 |
| 82 | Net | | P-660215 |

| Ref. No. | Description | R/S Part. No. | Mfr's Part. No. |
|---|---|---|---|
| 83 | Bottom Plate | | P-412236 |
| 84 | Foot (D) | | P-610494 |
| 85 | Screw Cover | F-0223 | P-610397 |
| 86 | Power Supply P.C.B. Bracket (R) | | P-412224 |
| 87 | Power Supply P.C.B. Bracket (L) | | P-412225 |
| 88 | Rubber Cushion for Tuning Key Board SW | | P-680279 |
| 89 | Cushion | | P-680278 |
| 90 | 4P RCA Pin Jack | J-1036 | P-320256 |
| 91 | 5P DIN Jack | J-6837 | P-320346 |
| 92 | Number Plate (B) (UL) | | P-730184 |
| 93 | Main Amp Chassis Ass'y | | P-400321 |
| | - Consisting of Main Amp Chassis | | P-400294 |
| | Reinforce Plate | | P-412336 |
| 94 | Lead Holder | | P-410030 |
| 95 | Clothe Seal | | P-480146 |

## HARDWARE

| Ref. No. | Description |
|---|---|
| S1 | F-Lock Screw 3 x 6 P-F |
| S2 | Tapping Screw 3 x 8 BT-2 |
| S3 | Tapping Screw (Black) 3 x 8 BT-2 |
| S4 | Triple Screw 3 x 16 P |
| S5 | Tapping Screw 3 x 6 BT-3 |
| S6 | Tapping Screw 3 x 6 BT-2 |
| S7 | Screw 3 x 6 P |
| S8 | Tapping Screw 4 x 8 BT-3-DEL |
| S9 | Toothed Tapping Screw (Black) 3 x 8 BT-2 |
| S10 | Triple Screw 3 x 12 P |
| S11 | Screw (Black) 4 x 37P |
| S12 | Tapping Screw 3 x 8 RFT-3-DEL or 3 x 8 BT-3-DEL |
| S13 | Wood Screw 3.1 x 10 PW |
| S14 | Tapping Screw 3 x 14 BT-2 |
| S15 | Tapping Screw 4 x 16 BT-3-DEL |
| S16 | Tapping Screw (Black) 3 x 8 BT-PLAX |
| S17 | F-Lock Screw 2.6 x 4P-FL |
| S18 | Tapping Screw 3 x 16 BT-2 |
| W1 | Washer 3W |
| W2 | Inner Teeth Washer 3W |
| W3 | Washer (Black) 4W |
| W4 | Outer Teeth Washer 3W |
| W5 | Washer (Black) 5W |
| W6 | Fiber Washer (Red or Black) $\phi$4.1 x $\phi$10 |
| SW1 | Spring Washer (Black) 4SW |
| N1 | Flange Nut 4N-F |
| N2 | Nut (Black) 4N |
| N3 | Push Nut 3N |
| N4 | Push Nut 4N |
| R1 | Blind Rivet (Black) YB-320 (UL only) |

# (32) EXPLODED VIEW

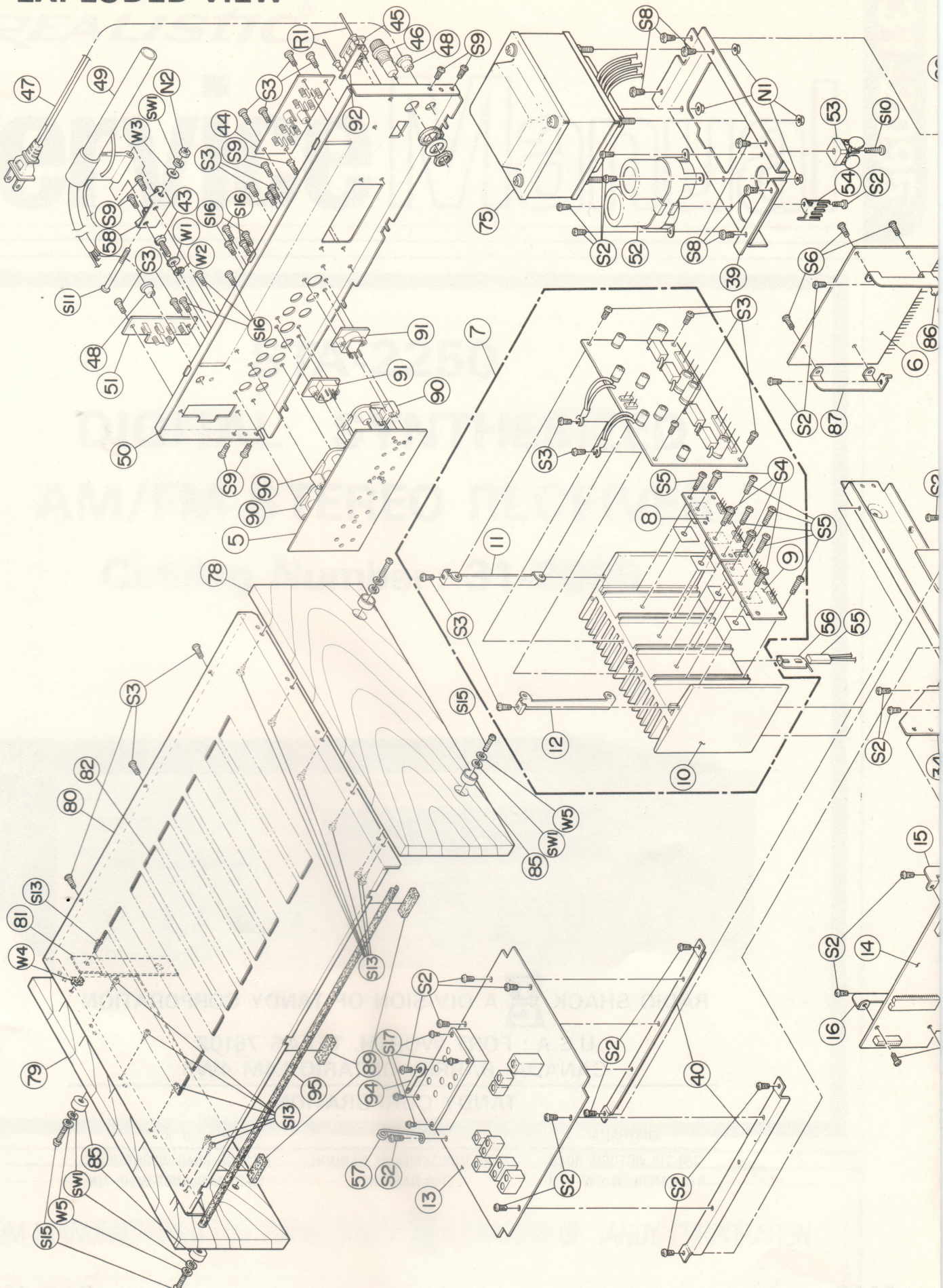

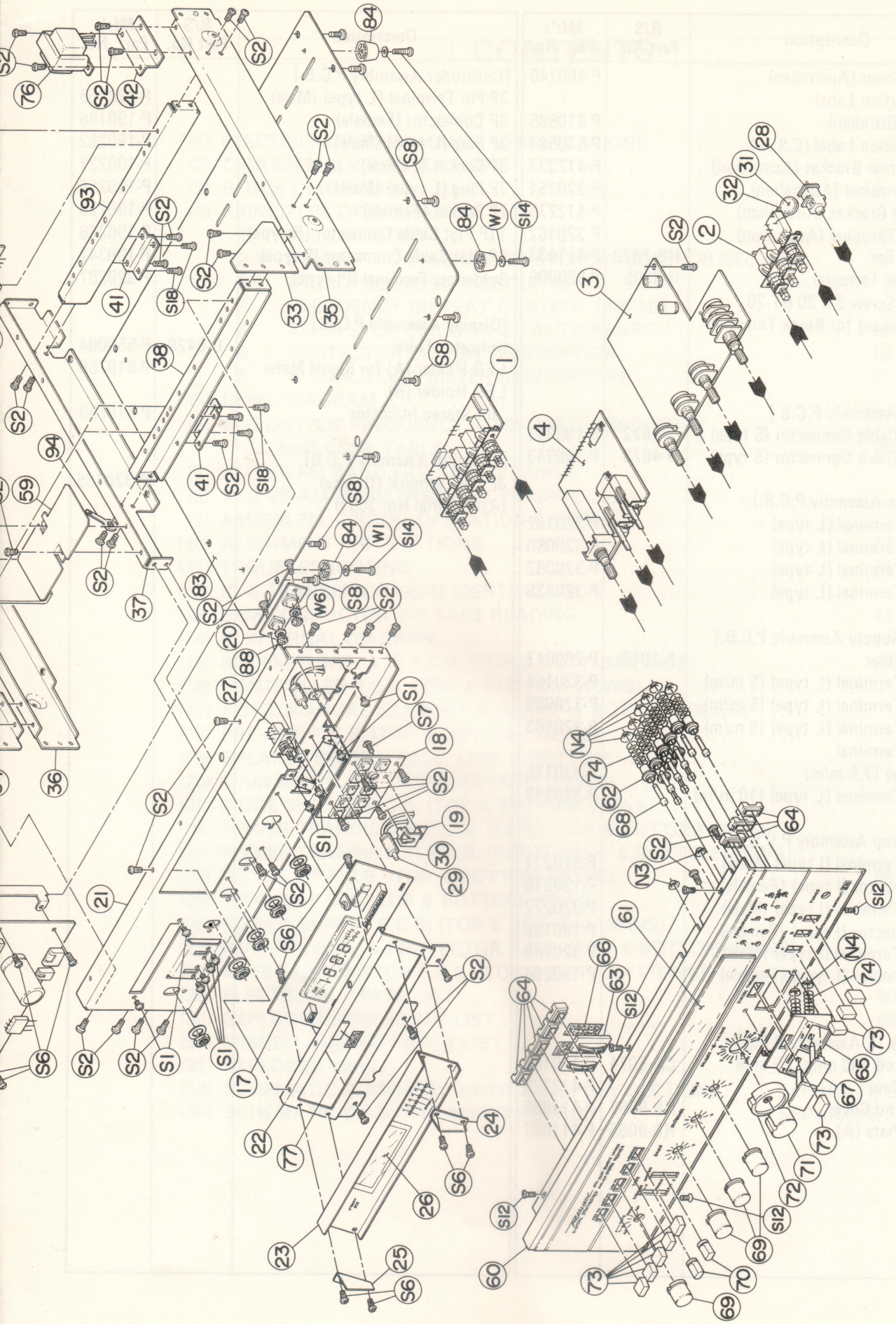

S2
76
42
84
S8
93
41
S18
33
35
38
94
59
37
83
W6
20
88
27
S1
S7
18
36
19
30
29
21
S6
17
22
77
24
26
23
25
1
4
3
2
28
31
32
N4
74
62
68
64
N3
61
66
63
S12
60
73
69
70
71
72
67
65

# (31) MISCELLANEOUS PARTS LIST

| Description | R/S Part No. | Mfr's Part. No. |
|---|---|---|
| Switch Cover (Australian) | | P-480145 |
| Fuse Caution Label (UL, Australian) | | P-810585 |
| Fuse Caution Label (C.S.A.) | | P-810584 |
| Transformer Bracket (Australian) | | P-412333 |
| Block Terminal (Australian) | | P-320251 |
| Terminal Bracket (Australian) | | P-412275 |
| Ground Terminal (Australian) | | P-320152 |
| Ground Bar | HB-7822 | P-411433 |
| Solderless Terminal | H-3305 | P-320006 |
| Tapping Screw 3 x 20 BT-20 (Australian) for Block Terminal | | |
| [Switch Assembly P.C.B.] | | |
| 7P Flat Cable Connector (S type) | J-4672 | P-190342 |
| 8P Flat Cable Connector (S type) | J-4673 | P-190343 |
| [Pre Amp Assembly P.C.B.] | | |
| 3P Pin Terminal (L type) | | P-320162 |
| 4P Pin Terminal (L type) | | P-320080 |
| 5P Pin Terminal (L type) | | P-320082 |
| 9P Pin Terminal (L type) | | P-320236 |
| [Power Supply Assembly P.C.B.] | | |
| Fuse Holder | F-1013 | P-260017 |
| 3P Pin Terminal (L type) (5 m/m) | | P-320162 |
| 4P Pin Terminal (L type) (5 m/m) | | P-320080 |
| 6P Pin Terminal (L type) (5 m/m) | | P-320163 |
| 3P Pin Terminal (L type) (7.5 m/m) | | P-320175 |
| 3P Pin Terminal (L type) (10 m/m) | | P-320349 |
| [Main Amp Assembly P.C.B.] | | |
| 2P Pin Terminal (I type) (Male) | | P-320271 |
| 2P Connector (I type) (Female) | | P-190216 |
| 3P Pin Terminal (I type) (Male) | | P-320272 |
| 3P Connector (I type) (Female) | | P-190196 |
| 5P Pin Terminal (I type) (Male) | | P-320280 |
| 5P Connector (I type) (Female) | | P-190204 |
| Eyelet | | |
| [Tuner & IF Assembly P.C.B.] | | |
| Balun Coil 300 ohm: 75 ohm | CA-5074 | P-110102 |
| Shield Case | | P-412228 |
| Front End Cover | HB-9065 | P-411906 |
| Shield Plate (A) | HB-9066 | P-411907 |

| Description | R/S Part No. | Mfr's Part. No. |
|---|---|---|
| [Controller Assembly P.C.B.] | | |
| 3P Pin Terminal (L type) (Male) | | P-320258 |
| 3P Connector (Female) | | P-190196 |
| 3P Plug (L type) (Male) | | P-190252 |
| 3P Socket (Female) | | P-190221 |
| 7P Plug (L type) (Male) | | P-190256 |
| 7P Socket (Female) | | P-190225 |
| 11P Flat Cable Connector (R type) | | P-190366 |
| 7P Flat Cable Connector (S type) | | P-190342 |
| Solderless Terminal (PI type) | | P-320287 |
| [Display Assembly P.C.B.] | | |
| Indicator Tube | D-5429 | P-550004 |
| LED Holder (A) for Signal Meter | | P-610758 |
| LED Holder (B) for Stereo Indicator | | P-610759 |
| [Function Assembly P.C.B] | | |
| 3P Pin Terminal (U type) (After Serial No. 3501) | | P-320165 |

RADIO SHACK A DIVISION OF TANDY CORPORATION

U.S.A.: FORT WORTH, TEXAS 76102
CANADA: BARRIE, ONTARIO L4M 4W5

TANDY CORPORATION

| AUSTRALIA | BELGIUM | U. K. |
| --- | --- | --- |
| 280-316 VICTORIA ROAD<br>RYDALMERE, N.S.W. 2116 | PARC INDUSTRIEL DE NANINNE<br>5140 NANINNE | BILSTON ROAD, WEDNESBURY<br>WEST MIDLANDS WS10 7JN |

11A0

Printed in Japan

# (34) SCHEMATIC DIAGRAM (AUDIO SECTION FOR UL & C.S.A. MODELS)

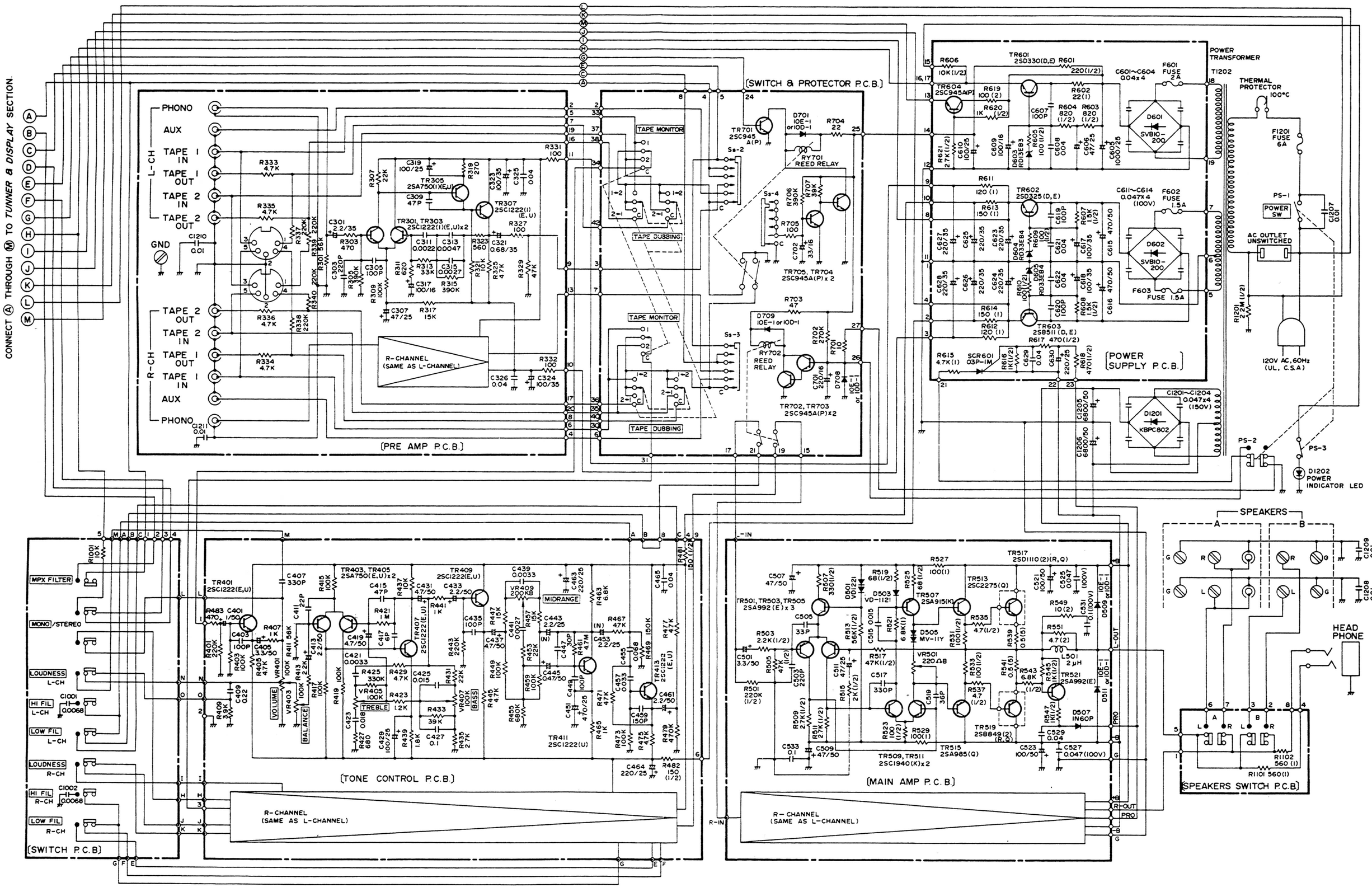


www.hifiengine.com

# (33) SCHEMATIC DIAGRAM (TUNER & DISPLAY SECTION)

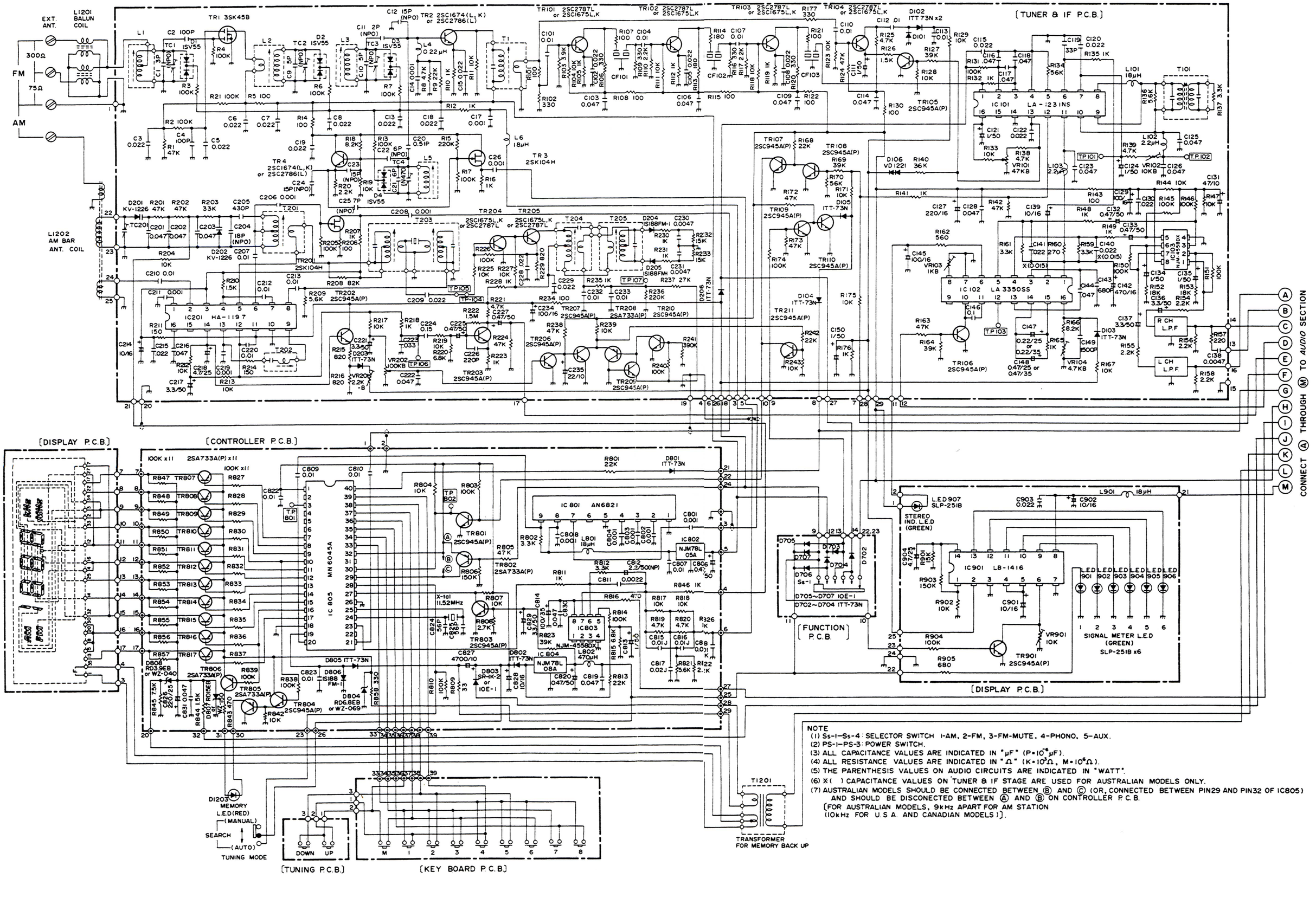


NOTE

(1) Ss-1–Ss-4 : SELECTOR SWITCH 1-AM, 2-FM, 3-FM-MUTE, 4-PHONO, 5-AUX.
(2) PS-1–PS-3 : POWER SWITCH.
(3) ALL CAPACITANCE VALUES ARE INDICATED IN "μF" ($P=10^{-6}\mu F$).
(4) ALL RESISTANCE VALUES ARE INDICATED IN "Ω" ($K=10^{3}\Omega$, $M=10^{6}\Omega$).
(5) THE PARENTHESIS VALUES ON AUDIO CIRCUITS ARE INDICATED IN "WATT".
(6) X( ) CAPACITANCE VALUES ON TUNER & IF STAGE ARE USED FOR AUSTRALIAN MODELS ONLY.
(7) AUSTRALIAN MODELS SHOULD BE CONNECTED BETWEEN Ⓑ AND Ⓒ (OR, CONNECTED BETWEEN PIN29 AND PIN32 OF IC805) AND SHOULD BE DISCONECTED BETWEEN Ⓐ AND Ⓑ ON CONTROLLER P.C.B.
[FOR AUSTRALIAN MODELS, 9kHz APART FOR AM STATION (10kHz FOR U.S.A. AND CANADIAN MODELS)].

www.hifiengine.com